FIAMMA® SERVICE

fiamma.com

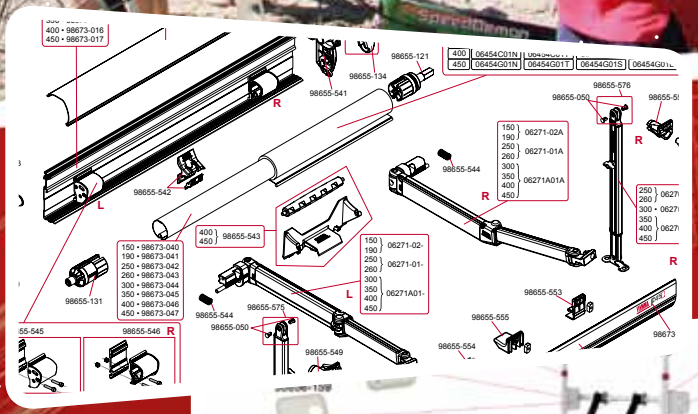

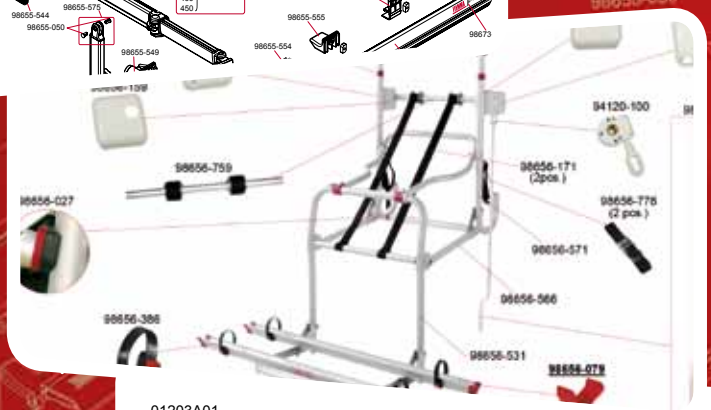

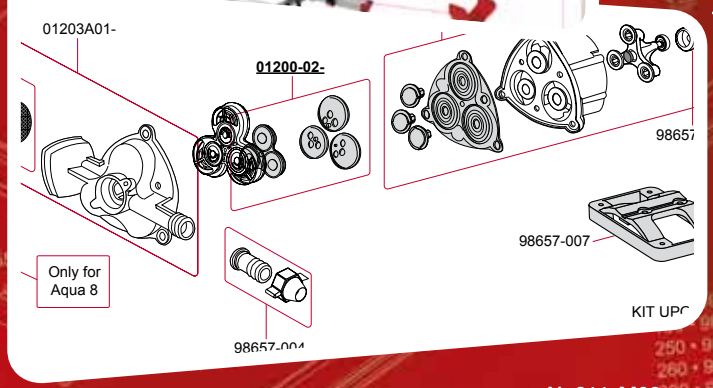

DE Ersatzteilkatalog

EN Spare Parts Catalogue

FR Liste Pièces Détachées

ES Catálogo Recambios

IT Catalogo Ricambi

2013

N. 211-M03

DE

VERKAUFSBEDINGUNGEN

Gültig ab 01.01.2013. **Copyright Fiamma 03/2013**.
Alle Rechte vorbehalten. In Italien gedruckt. Alle Illustrationen dieses Prospektes basieren auf den neuesten, uns im Moment vorliegenden Informationen.

Empfohlene Endverbraucherpreise, ohne MwSt., ohne Montage, ohne Zoll und ohne Transportkosten.
Die Fiamma S.p.A. behält sich das Recht vor, jederzeit Änderungen der Preise, Materialen, Angaben und Modelle vorzunehmen und die Produktion von Modellen einzustellen. Fiamma kommt nicht für eventuelle Druckfehler oder Ungenauigkeiten im Katalog auf. Die Farben können aufgrund des Druckvorganges im Katalog abweichen. Dieser Katalog hebt die vorhergehende Ausführung auf.

EN

SALE CONDITIONS

Validity from 01.01.2013. **Copyright Fiamma 03/2013**.
All rights reserved. Printed in Italy. All illustrations and specifications contained in this catalogue are based on the most recent information at the time of the publication.

Mentioned prices are suggested retail prices, Vat, Installation, Duties and Transport cost excluded, shipment ex works. Fiamma S.p.A. reserves the right to modify at any time, without notice, prices, materials, specifications and models or to cease production of any model.
Fiamma is not responsible for possible mistakes of printing or inexactness pertinent to the contents of the catalogue. The colour of the production may be different because of the processes of printing.
This catalogue replaces and cancels the previous ones.

FR

CONDITIONS DE VENTE

Applicable à partir de 01.01.2013. **Copyright Fiamma 03/2013**.
Droits d'auteurs réservés. Imprimé en Italie. Toutes les illustrations et le contenu spécifique de ce catalogue sont basés sur les informations les plus récentes disponibles au moment de la publication.

Les prix mentionnés correspondent aux prix public conseillés, TVA, droits, montage et transport non compris, envoi départ usine. Fiamma se réserve le droit de faire des modifications à n'importe quel moment sans préavis en ce qui concerne prix, matériaux, modèles et en cas d'arrêt de production des modèles. Fiamma ne peut être tenue responsable d'éventuelles erreurs d'imprimerie ou inexactitudes relatives au contenu même du catalogue.
Les couleurs de nos articles peuvent différer à cause des procédés d'impression du catalogue.
Ce catalogue remplace et annule les précédents.

ES

CONDICIONES DE VENTA

Validez desde 01.01.2013. **Copyright Fiamma 03/2013**.
Todos los derechos reservados. Impreso en Italia. Todas las ilustraciones y los contenidos específicos de este catálogo están basados en las más recientes informaciones disponibles en el momento de la publicación.

Precios al público aconsejados, iva, gastos de montaje y entrega excluidos, entrega franco fábrica. Fiamma Spa se reserva el derecho a modificar, en cualquier momento y sin aviso previo, precios, materiales, características y modelos y a detener la producción de modelos. Fiamma non responde de posibles errores de impresión o inexactitudes por lo que respecta al contenido del catálogo. Los colores de la producción pueden ser diferentes a causa de las fases de impresión del catálogo. El presente catálogo anula las publicaciones anteriores.

IT

CONDIZIONI DI VENDITA

Validità: dal 01.01.2013. **Copyright Fiamma 03/2013**.
Tutti i diritti riservati. Stampato in Italia. Tutte le illustrazioni e le specifiche contenute in questo catalogo sono basate sulle più recenti informazioni disponibili al momento della pubblicazione.

Prezzi al pubblico consigliati, iva, montaggio e trasporto esclusi, consegna franco fabbrica.
Fiamma si riserva il diritto di fare modifiche in qualsiasi momento, senza preavviso, in prezzi, materiali, specifiche e modelli e di cessare la produzione di modelli stessi. Fiamma non risponde di eventuali errori di stampa o inesattezze relativamente al contenuto del catalogo.
I colori della produzione possono differire a causa dei processi di stampa del catalogo.
Questo catalogo annulla i precedenti.

INDEX

Product	Page
Fiammastore	
F45 S Polar White 150-450	4
F45 S Titanium 250-450	5
F45 S Deep Black 260	6
F45 S VW T5 Titanium 260-300	7
F45 L Polar White 450-550	8
F45 L Titanium 450-550	9
F45 Eagle Polar White 350-450	10
F45 Ti Polar White 250-450	11
F45 Ti Titanium 250-450	12
F1 Ti Titanium 250-400	12
F45 Ti L Polar White 450-550	13
F45 Ti L Titanium 450-550	14
F45 Ti Titanium VW T5 260	15
F1 Ti Titanium 260	15
F45 i 250-400	16
F45 i L 450-550	17
F45 Plus 250-400	18
F45 Plus L 400-550	19
F65 S Polar White 260-400	20
F65 S Titanium 320-400	21
F65 S Deep Black 320-370-400	22
F65 L Polar White 400-490	23
F65 L Titanium 400-490	24
F65 Eagle Polar White-Titanium 400	25
F65 Polar White 260-400	26
F65 Titanium 290-400	27
F65 Polar White - Titanium 450-490	28
Caravanstore 190-255 (2013)	29
Caravanstore 280-400 (2013)	29
Caravanstore 190-255 (2007)	30
Caravanstore 280-400 (2007)	30
Caravanstore 190-255 (2005)	31
Caravanstore 280-400 (2005)	31
F35 Pro 180-250 (2013)	32
F35 Pro 270-300 (2013)	32
F35 Pro 180-250 (2007)	33
F35 Pro 270-300 (2007)	33
F35 Pro 180-250 (2005)	34
F35 Pro 270-300 (2005)	34
Sunstore 260-290-340	35
W35 135-195	35
Fiamma ZIP (F45 S) 300-350	36
Fiamma ZIP (F45 L) 400-450	37
Fiamma ZIP (F45 Ti) 250-350	38
Fiamma ZIP (F45 Ti L) 400-450	39
Caravanstore ZIP 255 (2013)	40
Caravanstore ZIP 280-400 (2013)	40
Caravanstore ZIP 255 (2007)	41
Caravanstore ZIP 280-400 (2007)	41
Caravanstore ZIP 255 (2005)	42
Caravanstore ZIP 280-400 (2005)	42
Fiamma ZIP (Enclosure)	43
Caravanstore ZIP (Enclosure)	44
Privacy Room F45	45
Privacy Room F65	46
Privacy Room Light	47
Privacy Room CS Light	48

Product	Page
Enclosures miscellaneous	49
Fiammastore Accessories	49

Carry-Bike

Carry-Bike Pro	51
Carry-Bike Pro Hymer-Dethleffs	51
Carry-Bike Pro Autotrail	52
Carry-Bike Hymer	52
Carry-Bike Pro C	53
Carry-Bike Pro C Knaus-Eiffeland	53
Carry-Bike L80-Laika	54
Carry-Bike EM-Eura Mobil	54
Carry-Bike Eura Mobil XL	55
Carry-Bike Pro Premium	55
Carry-Bike Pro C Premium	56
Carry-Bike Premium S	56
Carry-Bike Premium SC	57
Carry-Bike Pro Deluxe	57
Carry-Bike Pro C Deluxe	58
Carry-Bike Lift 77	58
Carry-Bike UL (2008)	59
Carry-Bike UL (2007)	59
Carry-Bike UL (<2007)	60
Carry-Bike CL (2008)	60
Carry-Bike CL (2007)	61
Carry-Bike CL (<2007)	61
Carry-Bike Trigano	62
Carry-Bike Joint	62
Carry-Bike SE-SEA	63
Carry-Bike SE	63
Carry-Bike Caravan XL A	64
Carry-Bike Caravan XL A Pro	64
Carry-Bike Caravan XL A Pro 200 (C32-)	65
Carry-Bike Caravan XL A Pro 200 (A32-)	65
Carry-Bike Caravan XL A Pro 200 (-32-)	66
Carry-Bike Caravan XL A Pro 300	66
Carry-Bike Caravan Hobby	67
Carry-Bike Caravan Universal	67
Carry-Bike Simple Plus 200	68
Carry-Bike VW T5	68
Carry-Bike VW T4	69
Carry-Bike VW T5 D	69
Carry-Bike VW T4 D	70
Carry-Bike VW T3 - T25	70
Carry-Bike VW T2	71
Carry-Bike 200 DJ Ducato >06/2009 (B89-)	71
Carry-Bike 200 DJ Ducato >06/2009	72
Carry-Bike 200 DJ Ducato <06/2006	72
Carry-Bike 200 DJ Ducato >06/2006	73
Carry-Bike 200 DJ Sprinter - Crafter	73
Carry-Bike 200 DJ Master	74
Carry-Bike 200 DJ Master D	74
Carry-Bike 200 D	75
Carry-Bike 200 DB	75
Carry-Bike Mercedes Viano	76
Carry-Bike Mercedes Vito	76
Carry-Bike Vivaro / Trafic	77
Carry-Bike Trafic D	77
Carry-Bike Trafic DL High Roof	78

Product	Page
Carry-Bike Ford Transit >2000	78
Carry-Bike Ford Transit <2000	79
Carry-Bike Backpack	79
Carry-Bike Backpack 4x4	80
Carry-Bike 4x4	80
Carry-Bike Garage Standard	81
Carry-Bike Garage Plus	81
Garage Slide Pro Bike	82
Garage Slide / Kit Bike Slide	82
Carry-Bike Accessories	83
Carry-Bike Kit Blue/Grey/Black Pro / Pro C	83
Carry-Bike Installation Kit	84-85

Quality Motorhome Products

Turbo-Vent Premium	86
Turbo-Vent / Turbo-Vent P3	87
Turbo-Vent Pro	88
Vent	88
Vent 40x40	89
Vent 28 / Turbo 28	89
Vent 50x50	90
LED	90
Aqua 8 / Aqua 8 iSensor	91
A20	91
Roll-Tank 23 W	92
Roll-Tank 40 W	92
Tank 21 W	92
Tank 18 W	92
Roll-Tank 23 F	93
Roll-Tank 40 F	93
Tank 70 L	93
Ultra-Box 1 / 2 / 3	94
Ultra-Box Sport Pro	94
Ultra-Box 180	94
Ultra-Box 320	95
Ultra-Box 360	95
Ultra-Box 500	95
Bi-Pot 34 / 39 / 30	96
Bi-Pot 1520 / 1513	97
Safe Door	98
Security	98
Duo Safe / Duo Safe Pro	98
Fixing Bar Pro L	98
Water Cap	99
Chock Level	99
Deluxe	99

NOTE

DE

Die unterstrichenen Artikelnummern auf den Explosionszeichnungen im Katalog entsprechen den meist gefragtesten Ersatzteilen.
Die mit einem Stern versehenen Artikelnummern stehen für Ersatzteile, welche kompatibel mit nicht mehr verfügbaren Ersatzteilen sind.
Diese können entsprechend der Originalartikelnummer optisch anders aussehen, haben aber die gleiche Funktion und sind somit dennoch kompatibel.

EN

Underlined codes in the exploded views of the catalogue correspond to the most requested items.
Codes marked with a star represent items no longer available, that can vary in shape compared with the original code, but are compatible with the original one and have the same functionality.

FR

Les références soulignées dans les éclatés du catalogue correspondent aux articles les plus demandés.
Les références avec une étoile renvoient à des articles compatibles avec des références n'étant plus disponibles, pouvant avoir un design différent par rapport à la référence originale mais conservant toutefois les mêmes fonctions.

ES

Los códigos subrayados sobre los dibujos del catálogo corresponden a los articúlos más pedidos.
Los códigos marcados con asterisco representan artículos que no están más disponibles, que pueden variar de forma con respecto al código original pero son compatibles y con la misma funcionalidad del original.

IT

I codici sottolineati sugli esplosi del catalogo corrispondono agli articoli maggiormente richiesti.
I codici con asterisco rappresentano articoli compatibili con codici non piu' disponibili, che possono variare di forma estetica rispetto il codice originale tuttavia compatibile e con la stessa funzionalità dello stesso.

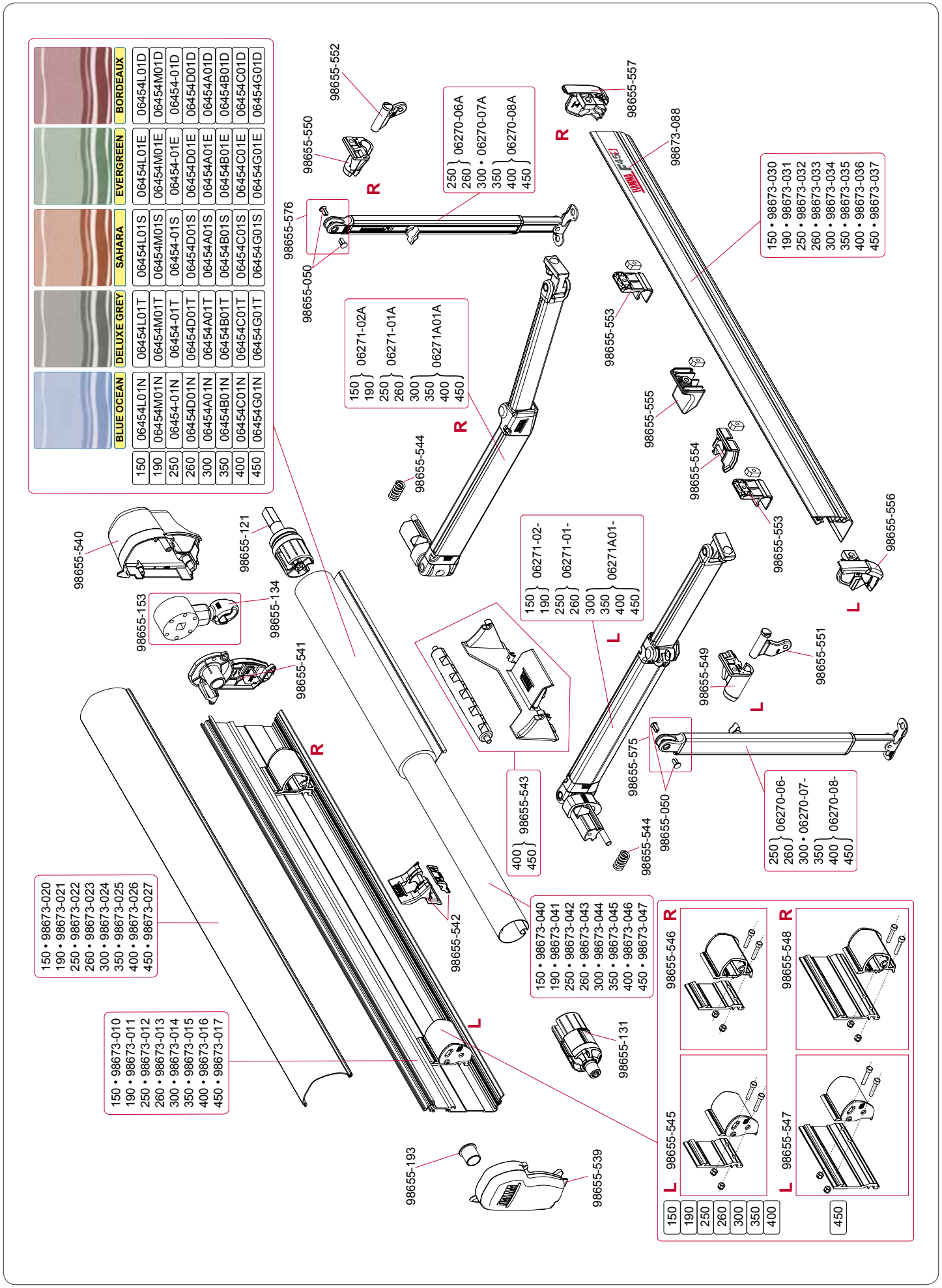

	BLUE OCEAN	DELUXE GREY	SAHARA	EVERGREEN	BORDEAUX
150	06454L01N	06454L01T	06454L01S	06454L01E	06454L01D
190	06454M01N	06454M01T	06454M01S	06454M01E	06454M01D
250	06454-01N	06454-01T	06454-01S	06454-01E	06454-01D
260	06454D01N	06454D01T	06454D01S	06454D01E	06454D01D
300	06454A01N	06454A01T	06454A01S	06454A01E	06454A01D
350	06454B01N	06454B01T	06454B01S	06454B01E	06454B01D
400	06454C01N	06454C01T	06454C01S	06454C01E	06454C01D
450	06454G01N	06454G01T	06454G01S	06454G01E	06454G01D

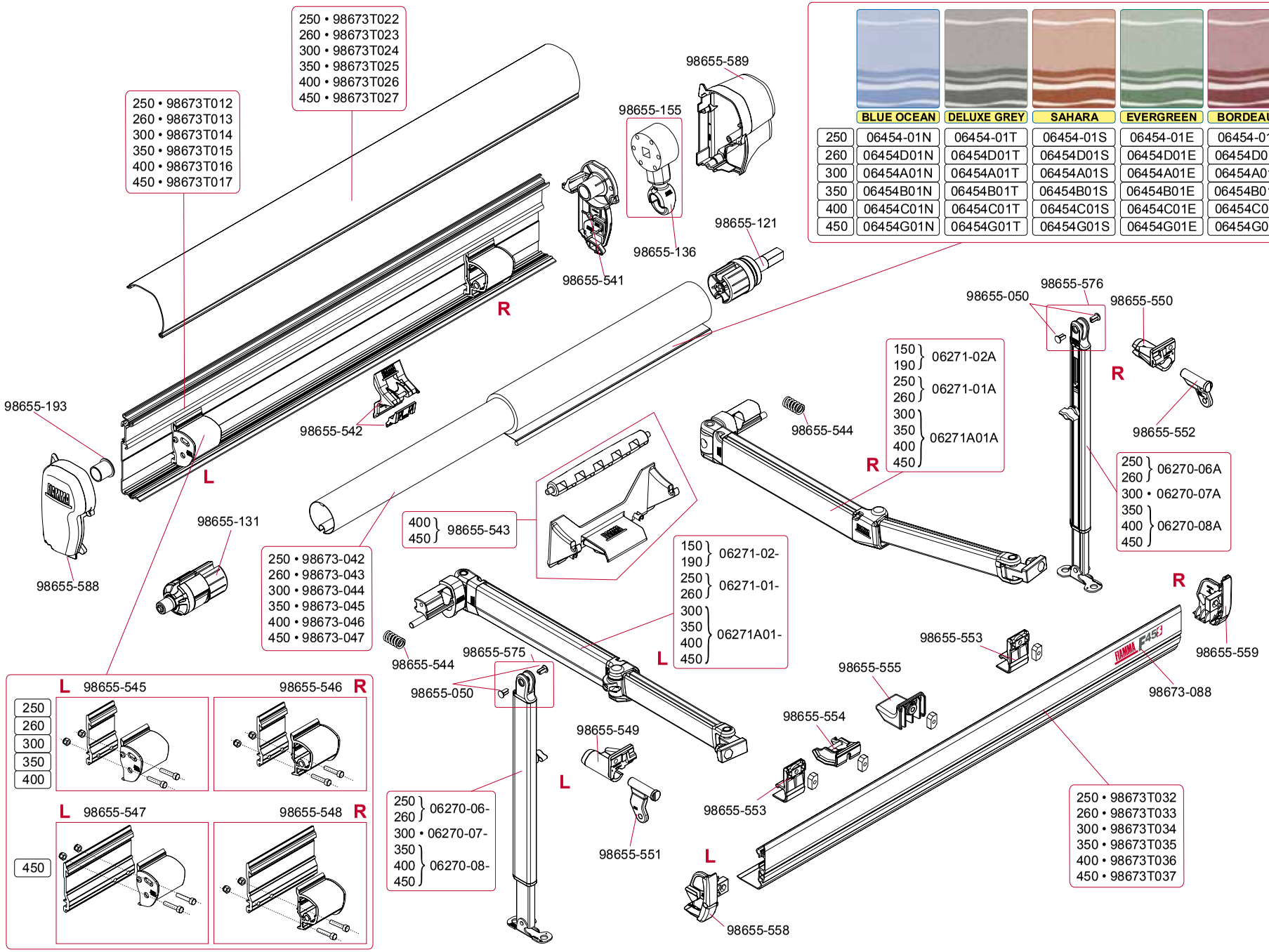

	BLUE OCEAN	DELUXE GREY	SAHARA	EVERGREEN	BORDEAUX
250	06454-01N	06454-01T	06454-01S	06454-01E	06454-01D
260	06454D01N	06454D01T	06454D01S	06454D01E	06454D01D
300	06454A01N	06454A01T	06454A01S	06454A01E	06454A01D
350	06454B01N	06454B01T	06454B01S	06454B01E	06454B01D
400	06454C01N	06454C01T	06454C01S	06454C01E	06454C01D
450	06454G01N	06454G01T	06454G01S	06454G01E	06454G01D

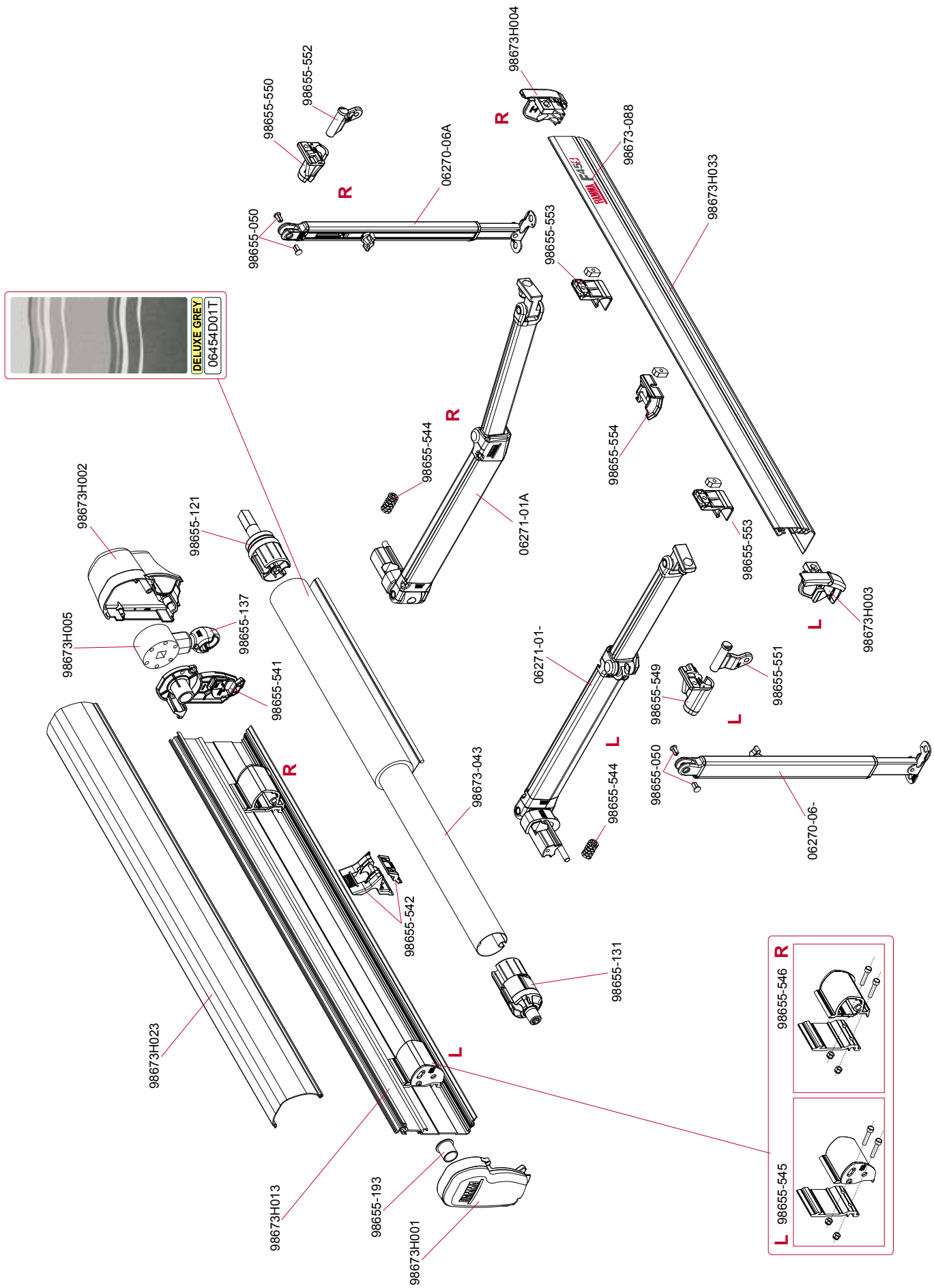
98655-550
98655-552
98673H004
R
06270-06A
98673-088
98673H033
98655-050
98655-553
DELUXE GREY
06454D01T
98655-544
R
06271-01A
98655-554
98673H002
98655-121
98655-553
98673H005
98655-137
98655-541
L
98673H003
06271-01-
98655-549
98655-551
L
98673-043
R
L
98655-544
98655-050
06270-06-
98655-542
98655-131
98673H023
L
98655-546
R
L
98655-545
98673H013
98655-193
98673H001

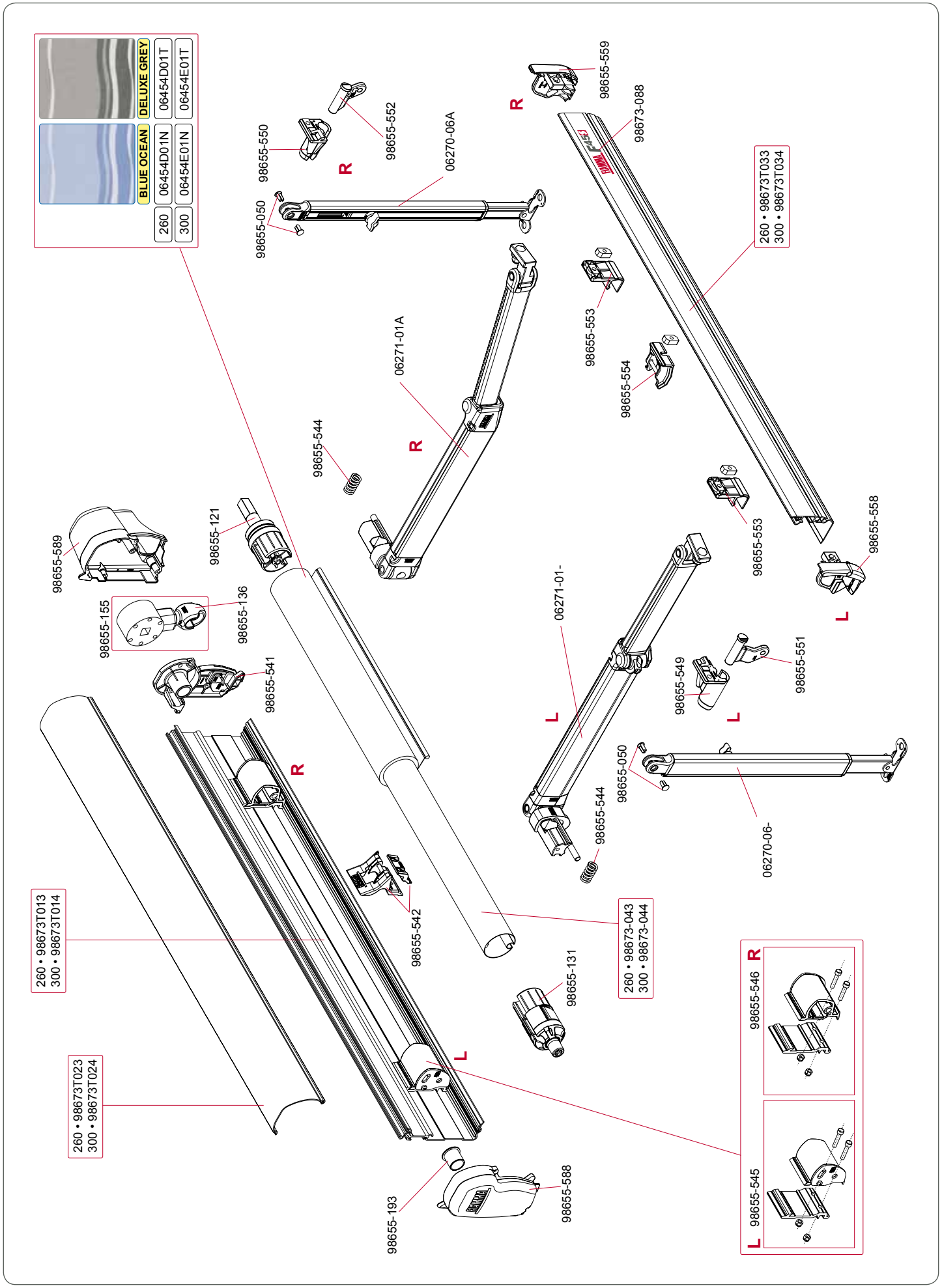

FIAMMASTORE

Polar White 450-550

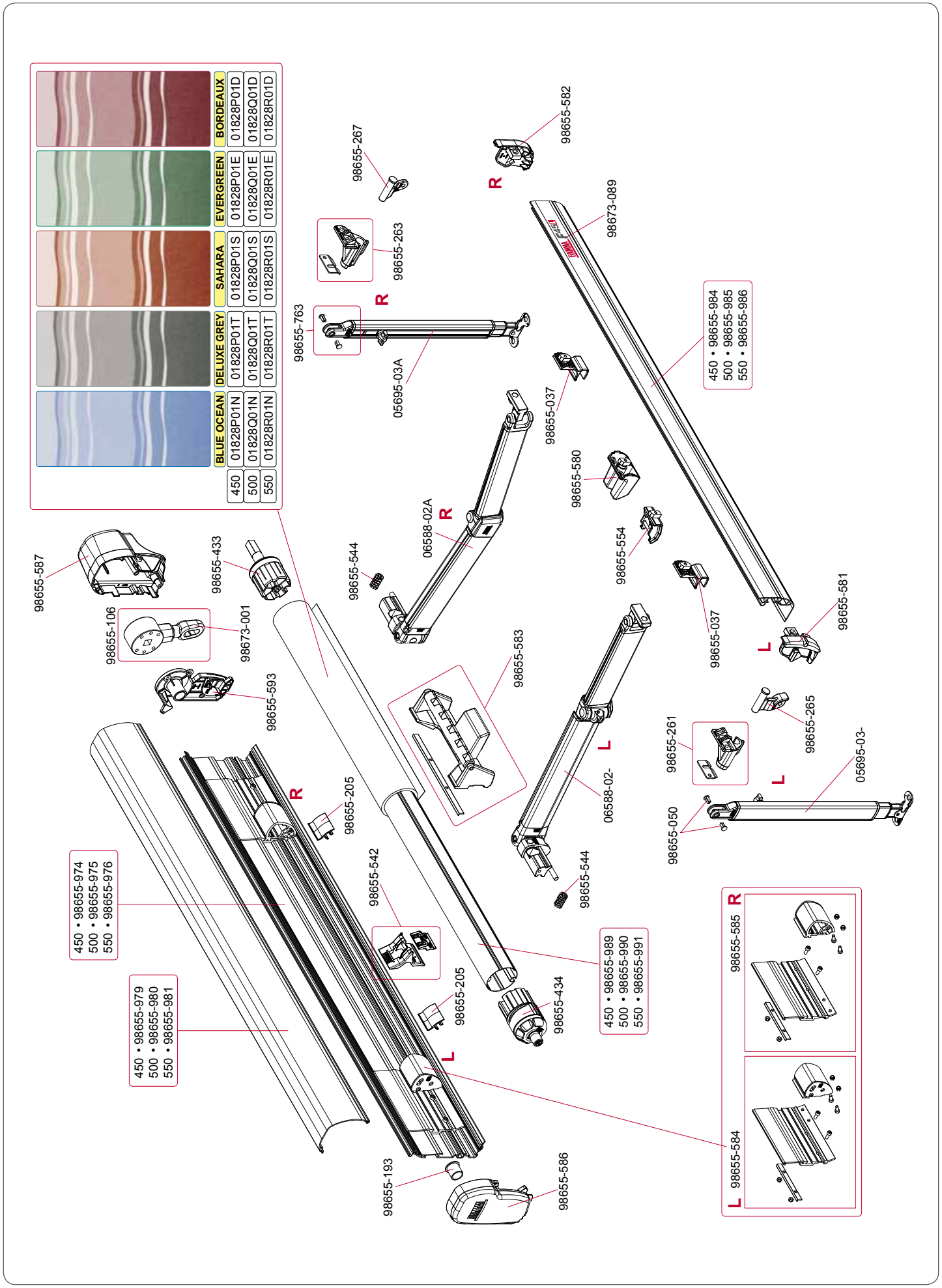

	BLUE OCEAN	DELUXE GREY	SAHARA	EVERGREEN	BORDEAUX
450	01828P01N	01828P01T	01828P01S	01828P01E	01828P01D
500	01828Q01N	01828Q01T	01828Q01S	01828Q01E	01828Q01D
550	01828R01N	01828R01T	01828R01S	01828R01E	01828R01D

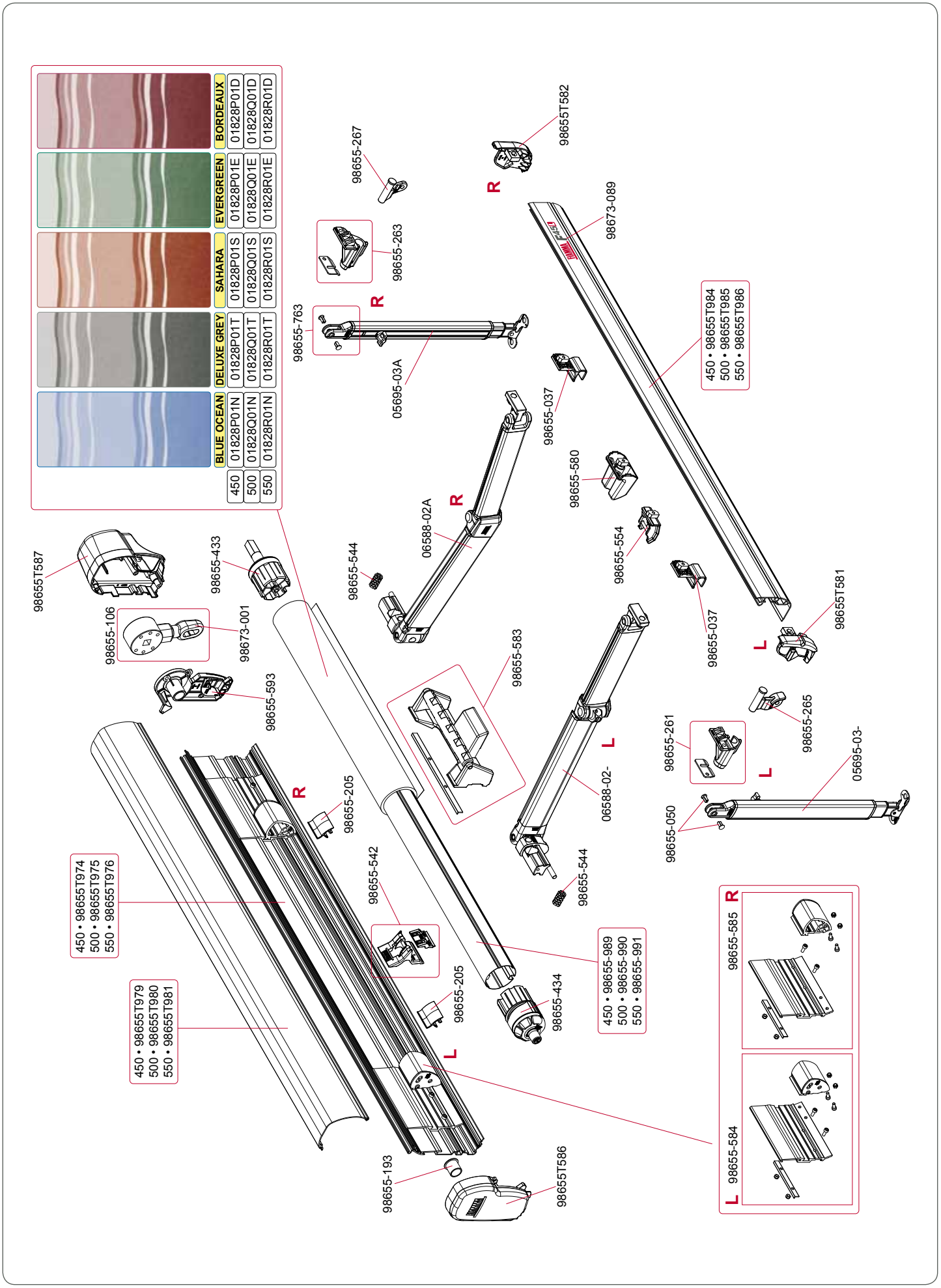
BLUE OCEAN
DELUXE GREY
SAHARA
EVERGREEN
BORDEAUX
450 01828P01N 01828P01T 01828P01S 01828P01E 01828P01D
500 01828Q01N 01828Q01T 01828Q01S 01828Q01E 01828Q01D
550 01828R01N 01828R01T 01828R01S 01828R01E 01828R01D
98655T587
98655-106
98655-433
98673-001
98655-593
450 • 98655T974
500 • 98655T975
550 • 98655T976
450 • 98655T979
500 • 98655T980
550 • 98655T981
98655-205
98655-542
98655-205
98655-193
98655T586
98655-544
06588-02A
98655-763
05695-03A
98655-263
98655-267
98655T582
98673-089
450 • 98655T984
500 • 98655T985
550 • 98655T986
98655-037
98655-580
98655-554
98655-037
98655-583
06588-02-
98655-544
98655-434
450 • 98655-989
500 • 98655-990
550 • 98655-991
98655T581
98655-265
05695-03-
98655-261
98655-050
98655-585
98655-584
R
L

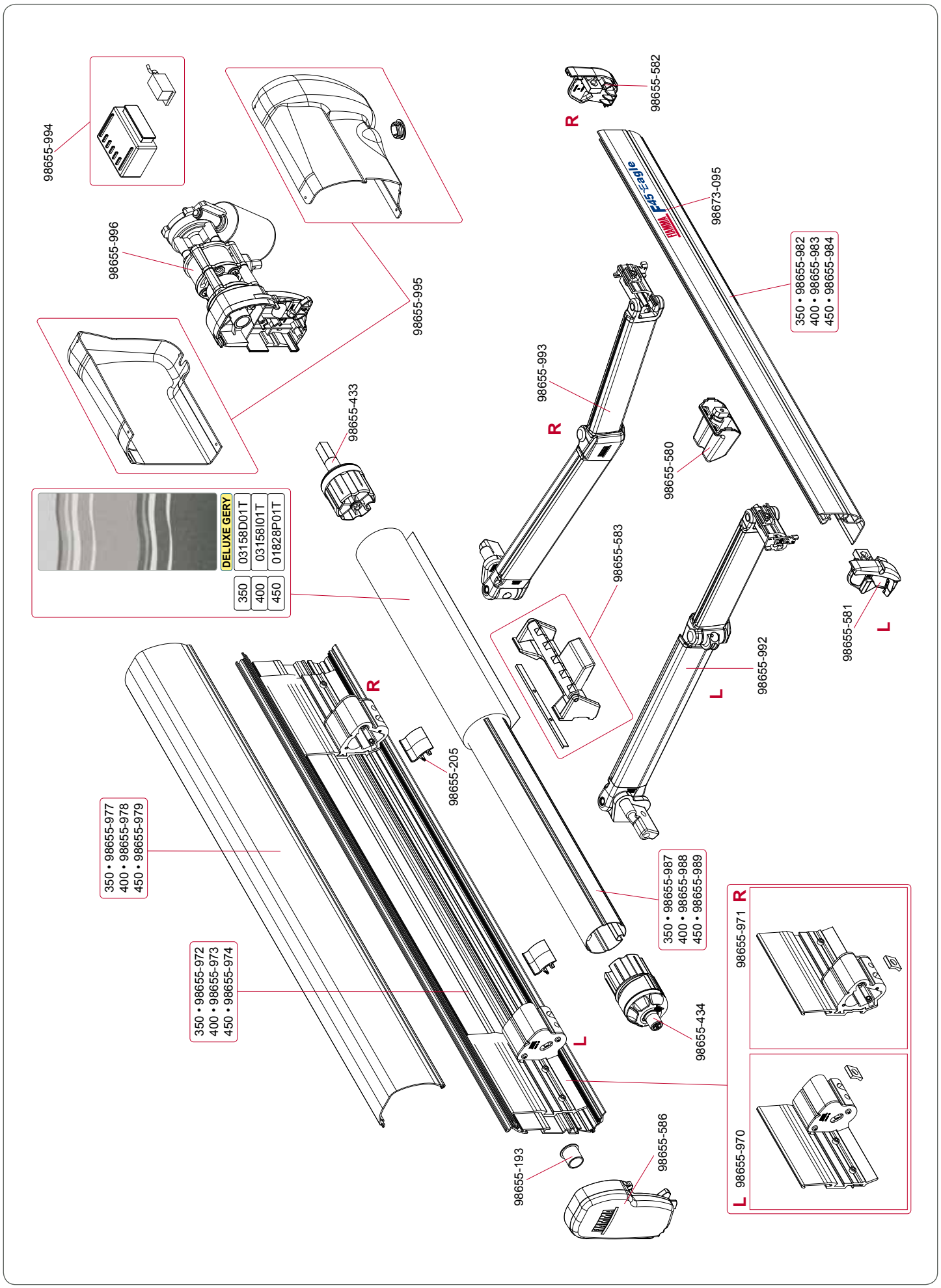
98655-994
98655-996
98655-995
98655-433
DELUXE GERY
350 03158D01T
400 03158I01T
450 01828P01T
98655-582
R
98673-095
350 • 98655-982
400 • 98655-983
450 • 98655-984
98655-993
R
98655-580
98655-583
98655-581
L
98655-992
L
R
98655-205
350 • 98655-977
400 • 98655-978
450 • 98655-979
350 • 98655-987
400 • 98655-988
450 • 98655-989
350 • 98655-972
400 • 98655-973
450 • 98655-974
L
98655-434
98655-971 R
L 98655-970
98655-193
98655-586

	BLUE OCEAN	DELUXE GREY	SAHARA	EVERGREEN	BORDEAUX
250	03158B01N	03158B01T	03158B01S	03158B01E	03158B01D
280	03158L01N	03158L01T	03158L01S	03158L01E	03158L01D
300	03158C01N	03158C01T	03158C01S	03158C01E	03158C01D
350	03158D01N	03158D01T	03158D01S	03158D01E	03158D01D
400	03158I01N	03158I01T	03158I01S	03158I01E	03158I01D
450	01828P01N	01828P01T	01828P01S	01828P01E	01828P01D

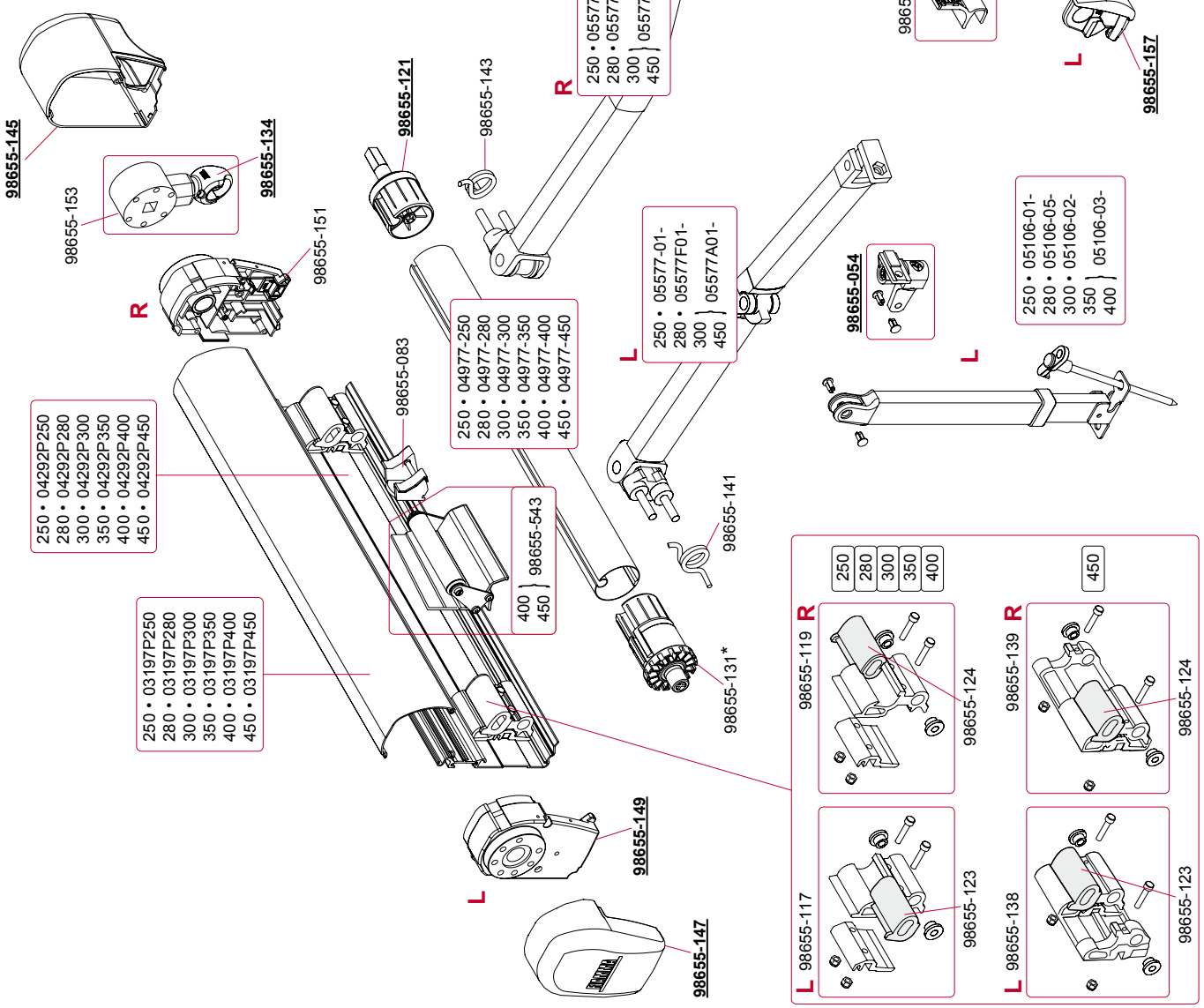

FIAMMASTORE

	BLUE OCEAN	DELUXE GREY	SAHARA	EVERGREEN	BORDEAUX
250	03158B01N	03158B01T	03158B01S	03158B01E	03158B01D
280	03158L01N	03158L01T	03158L01S	03158L01E	03158L01D
300	03158C01N	03158C01T	03158C01S	03158C01E	03158C01D
350	03158D01N	03158D01T	03158D01S	03158D01E	03158D01D
400	03158I01N	03158I01T	03158I01S	03158I01E	03158I01D
450	01828P01N	01828P01T	01828P01S	01828P01E	01828P01D

98655-209
98655-155
98655-136
98655-219
R
250 • 04292-02A
280 • 04292-280
300 • 04292-02B
350 • 04292-02C
400 • 04292-02G
450 • 04292-450
250 • 03197A01A
280 • 03197A280
300 • 03197A01B
350 • 03197A01C
400 • 03197A01G
450 • 03197A450
98655-083
400 } 98655-543
450
98655-121
98655-143
250 • 04977-250
280 • 04977-280
300 • 04977-300
350 • 04977-350
400 • 04977-400
450 • 04977-450
98655-757
98655-452
R
250 • 05577-01A
280 • 05577F01A
300 } 05577A01A
450
L
250 • 05577-01-
280 • 05577F01-
300 } 05577A01-
450
98655-141
98655-131*
L
98655-213
98655-211
98655-050
98655-056
R
250 • 05106-01A
280 • 05106-05A
300 • 05106-02A
350 } 05106-03A
450
98655-448
98655-036
98655-054
L
250 • 05106-01-
280 • 05106-05-
300 • 05106-02-
350 } 05106-03-
450
R
98655-174
98673-092
250 • 06177A250
280 • 06177A280
300 • 06177A300
350 • 06177A350
400 • 06177A400
450 • 06177A450
L
98655-173
L 98655-117
98655-123
R 98655-119
250 280 300 350 400
98655-124
L 98655-138
98655-123
R 98655-139
450
98655-124

Polar White 450-550

S/N > 9389000 (F700045)
S/N > 9370400 (F701732)

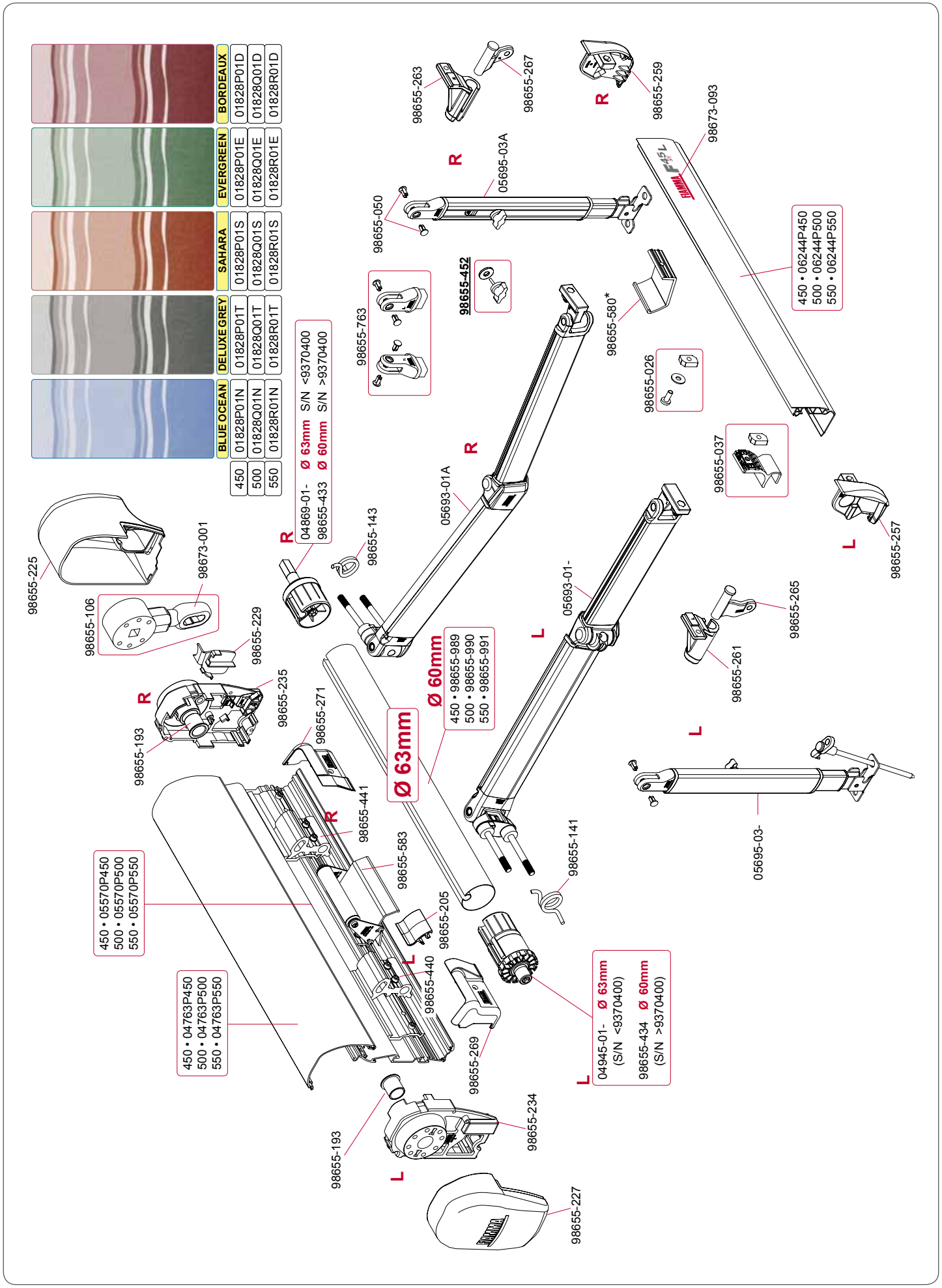

Titanium 450-550

S/N > 9583000 (F700045)
S/N > 9344000 (F701732)

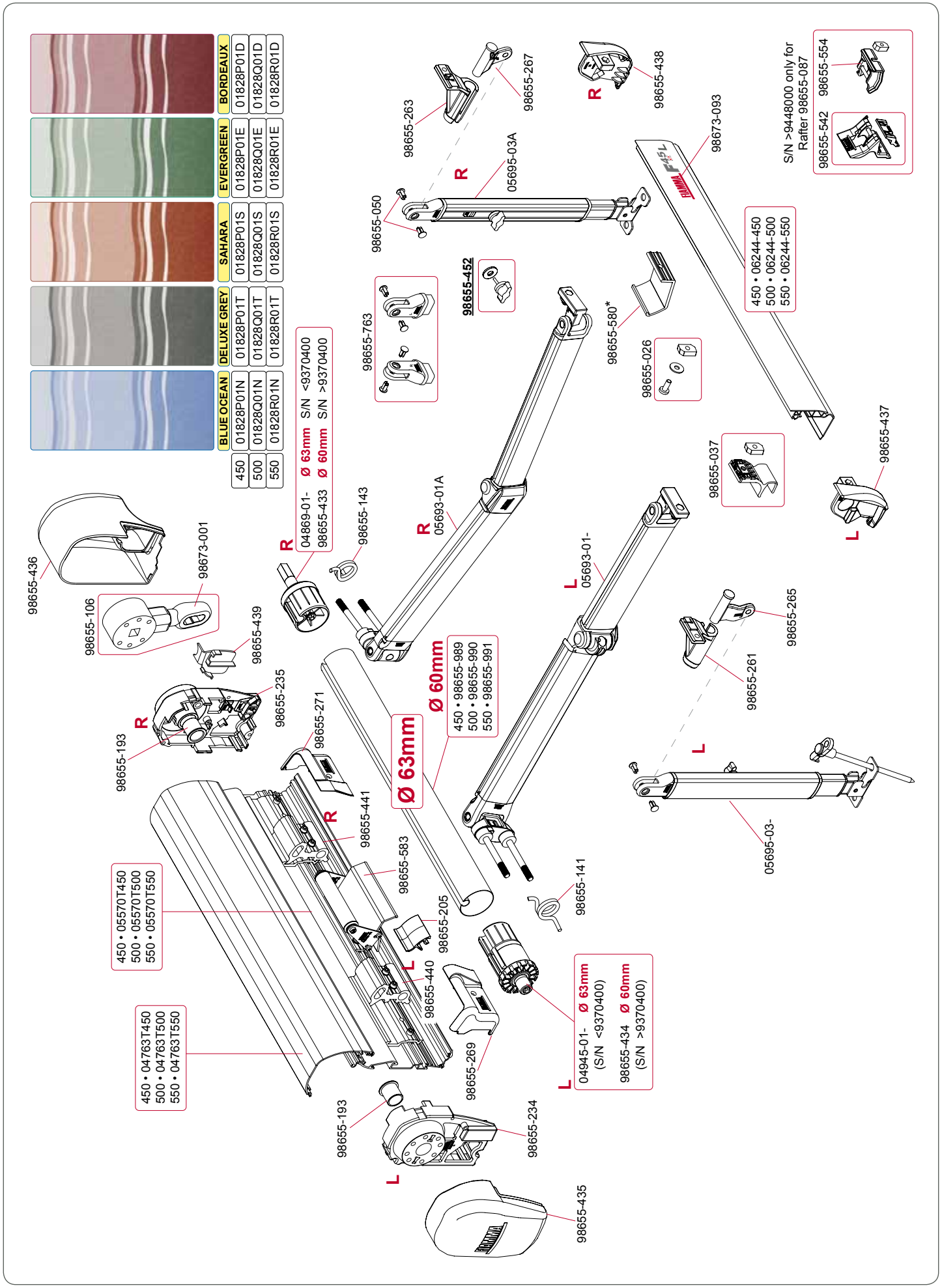

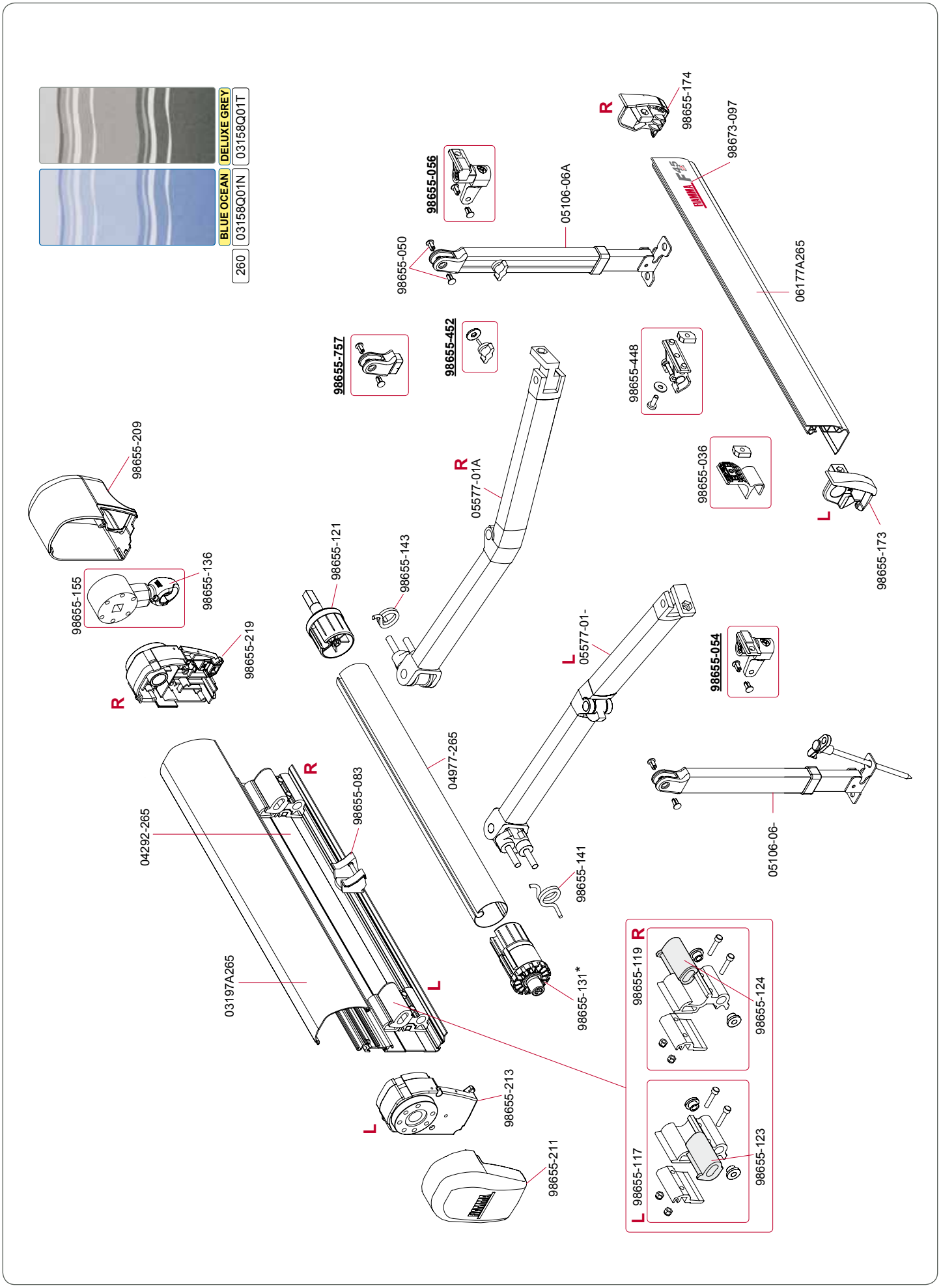

FIAMMASTORE

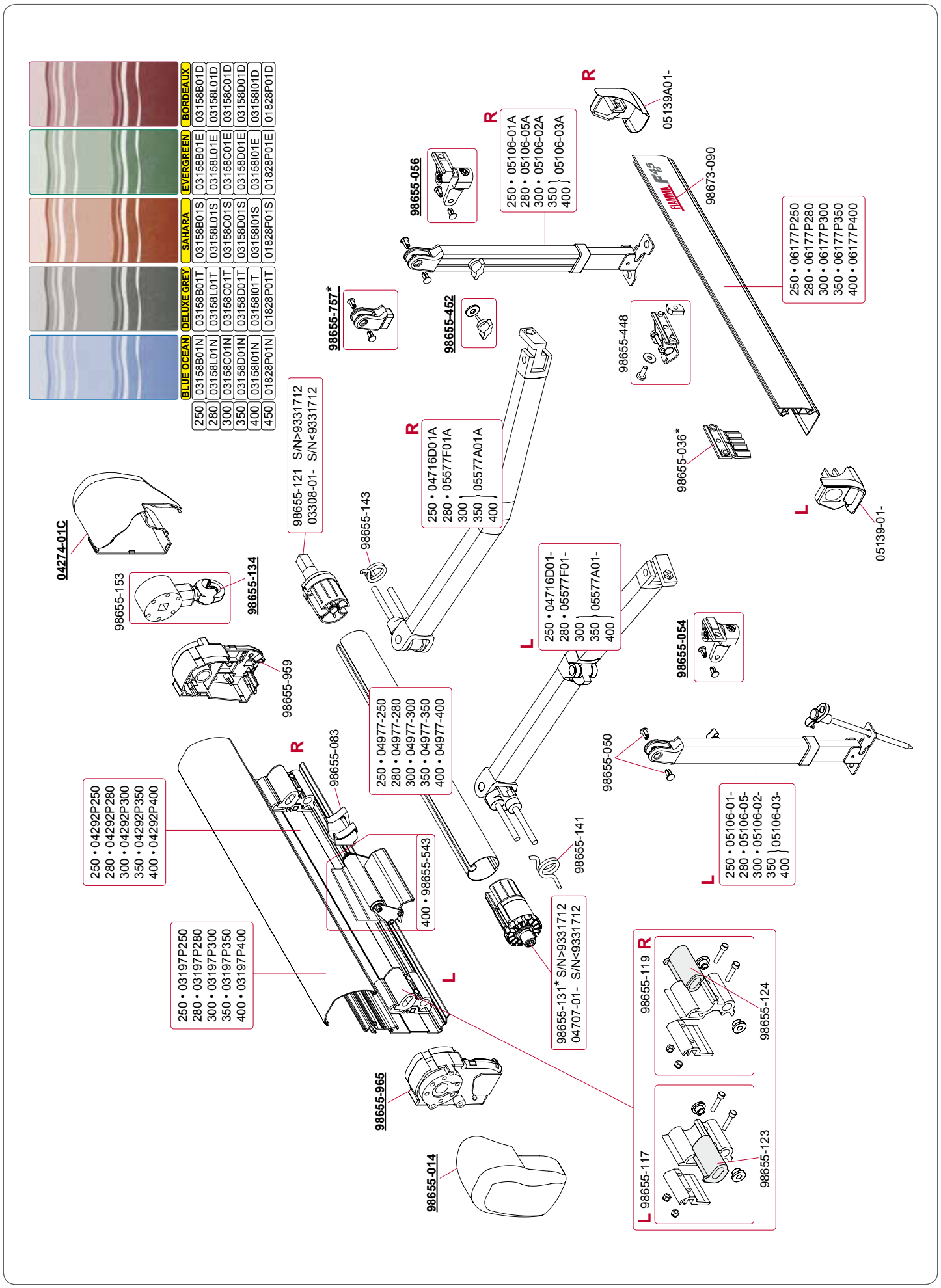
BLUE OCEAN
DELUXE GREY
SAHARA
EVERGREEN
BORDEAUX
250 03158B01N 03158B01T 03158B01S 03158B01E 03158B01D
280 03158L01N 03158L01T 03158L01S 03158L01E 03158L01D
300 03158C01N 03158C01T 03158C01S 03158C01E 03158C01D
350 03158D01N 03158D01T 03158D01S 03158D01E 03158D01D
400 03158I01N 03158I01T 03158I01S 03158I01E 03158I01D
450 01828P01N 01828P01T 01828P01S 01828P01E 01828P01D
04274-01C
98655-153
98655-134
98655-959
98655-121 S/N>9331712
03308-01- S/N<9331712
98655-143
98655-757*
98655-452
98655-056
R
250 • 05106-01A
280 • 05106-05A
300 • 05106-02A
350 } 05106-03A
400
05139A01-
98673-090
250 • 06177P250
280 • 06177P280
300 • 06177P300
350 • 06177P350
400 • 06177P400
98655-448
98655-036*
05139-01-
L
250 • 04716D01A
280 • 05577F01A
300 } 05577A01A
350
400
250 • 04716D01-
280 • 05577F01-
300 } 05577A01-
350
400
98655-054
98655-050
250 • 05106-01-
280 • 05106-05-
300 • 05106-02-
350 } 05106-03-
400
250 • 04977-250
280 • 04977-280
300 • 04977-300
350 • 04977-350
400 • 04977-400
98655-083
400 • 98655-543
250 • 04292P250
280 • 04292P280
300 • 04292P300
350 • 04292P350
400 • 04292P400
250 • 03197P250
280 • 03197P280
300 • 03197P300
350 • 03197P350
400 • 03197P400
98655-141
98655-131* S/N>9331712
04707-01- S/N<9331712
98655-965
98655-014
98655-119
98655-124
98655-117
98655-123

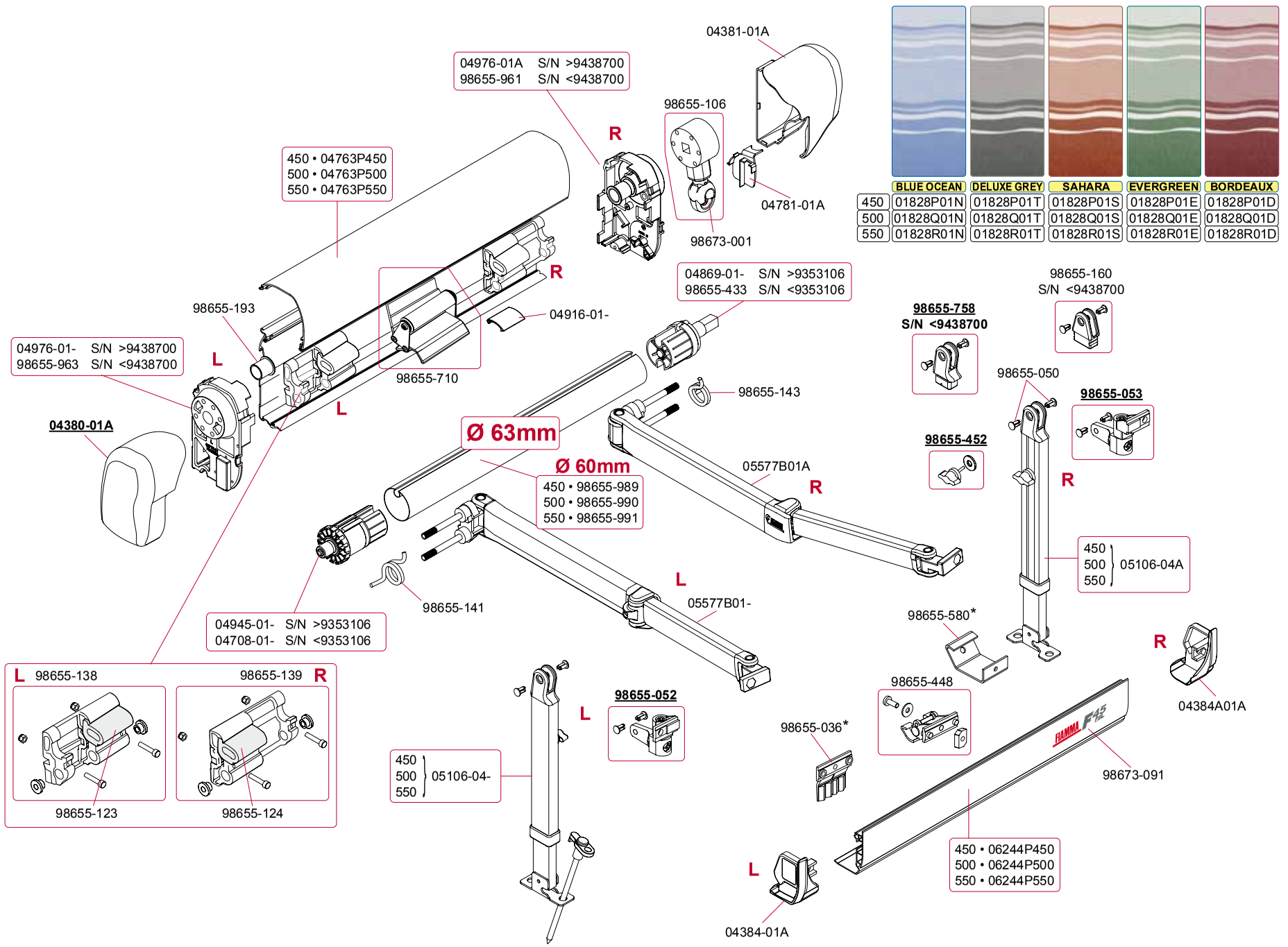

	BLUE OCEAN	DELUXE GREY	SAHARA	EVERGREEN	BORDEAUX
450	01828P01N	01828P01T	01828P01S	01828P01E	01828P01D
500	01828Q01N	01828Q01T	01828Q01S	01828Q01E	01828Q01D
550	01828R01N	01828R01T	01828R01S	01828R01E	01828R01D

Fiamma F45 Plus 400

DE • Bei Bestellungen von Ersatzteilen der 4 m Markise bitte immer die Gehäusehöhe mitangeben.
EN • For the 4m awning always specify with the order the height of the box, whatever spare part you are ordering
FR • Pour les stores de 4m, il est indispensable de préciser sur le bon de commande la hauteur du boîtier, indépendamment de la pièce de rechange à commander.
ES • Para el toldo de 4m especifique siempre con el pedido la altura de la carcasa, independientemente del repuesto pedido.
IT • Per il tendalino da 4m specificare sempre con l'ordine l'altezza del cassonetto, indipendentemente dal ricambio da ordinare.

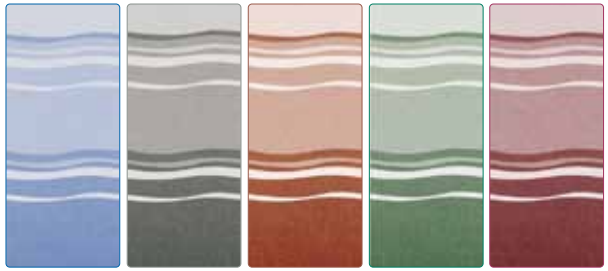

	BLUE OCEAN	DELUXE GREY	SAHARA	EVERGREEN	BORDEAUX
250	03402A01N	03402A01T	03402A01S	03402A01E	03402A01D
300	03402B01N	03402B01T	03402B01S	03402B01E	03402B01D
350	03402C01N	03402C01T	03402C01S	03402C01E	03402C01D
400	03402D01N	03402D01T	03402D01S	03402D01E	03402D01D

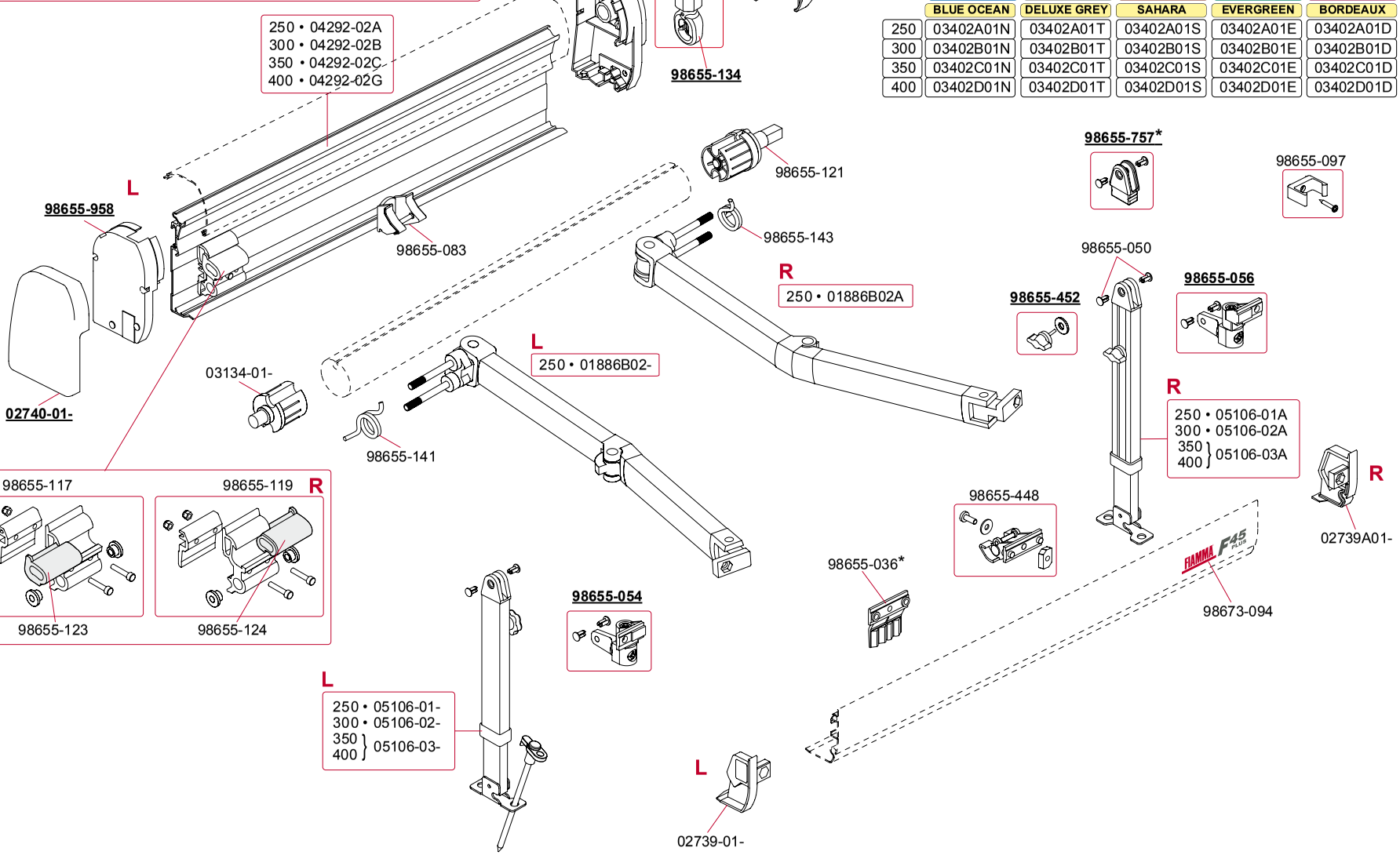

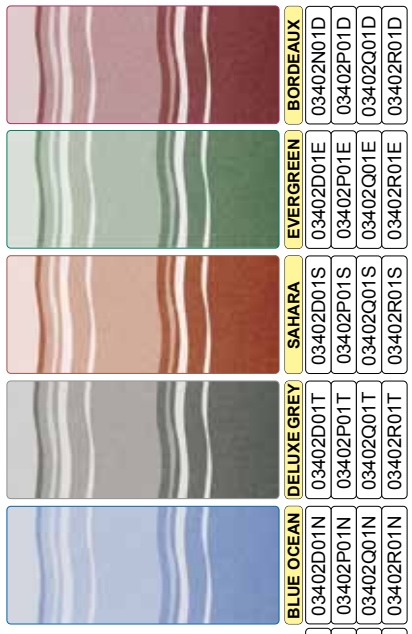

	BLUE OCEAN	DELUXE GREY	SAHARA	EVERGREEN	BORDEAUX
400	03402D01N	03402D01T	03402D01S	03402D01E	03402N01D
450	03402P01N	03402P01T	03402P01S	03402P01E	03402P01D
500	03402Q01N	03402Q01T	03402Q01S	03402Q01E	03402Q01D
550	03402R01N	03402R01T	03402R01S	03402R01E	03402R01D

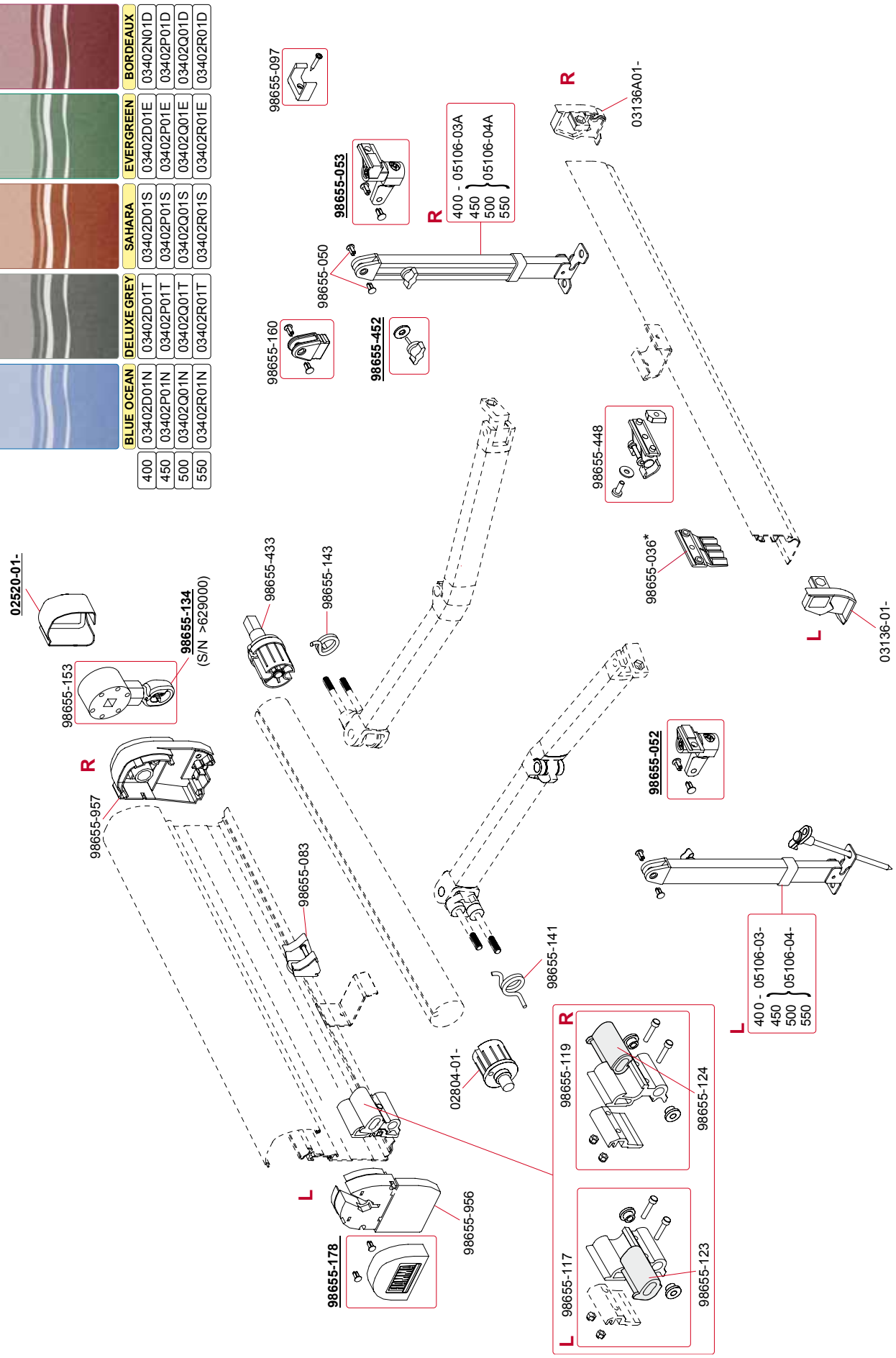

FIAMMASTORE

Polar White 260-400 S/N > 9319000 (F701732)

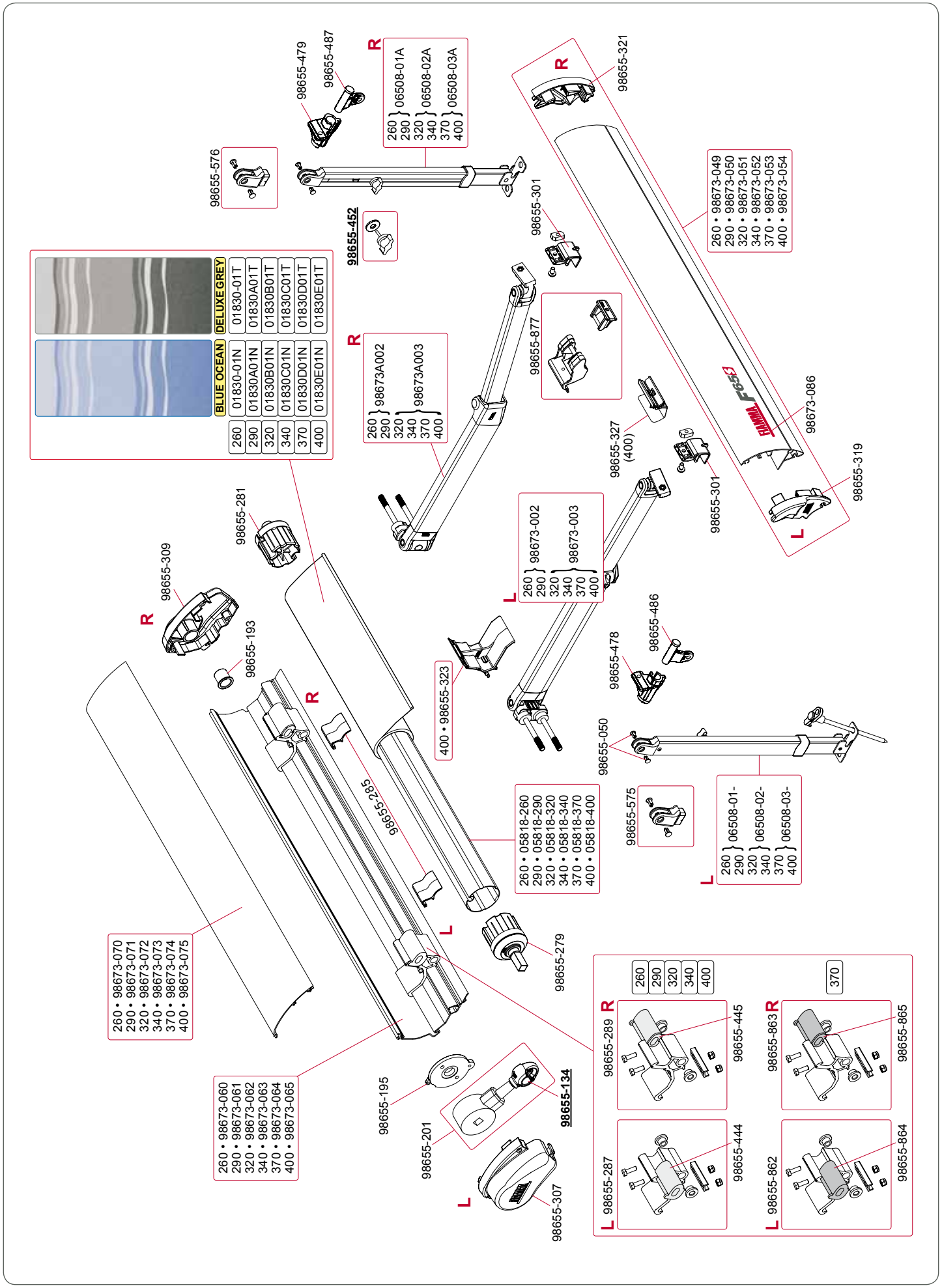

Titanium 320-400 S/N > 9319000 (F701732)

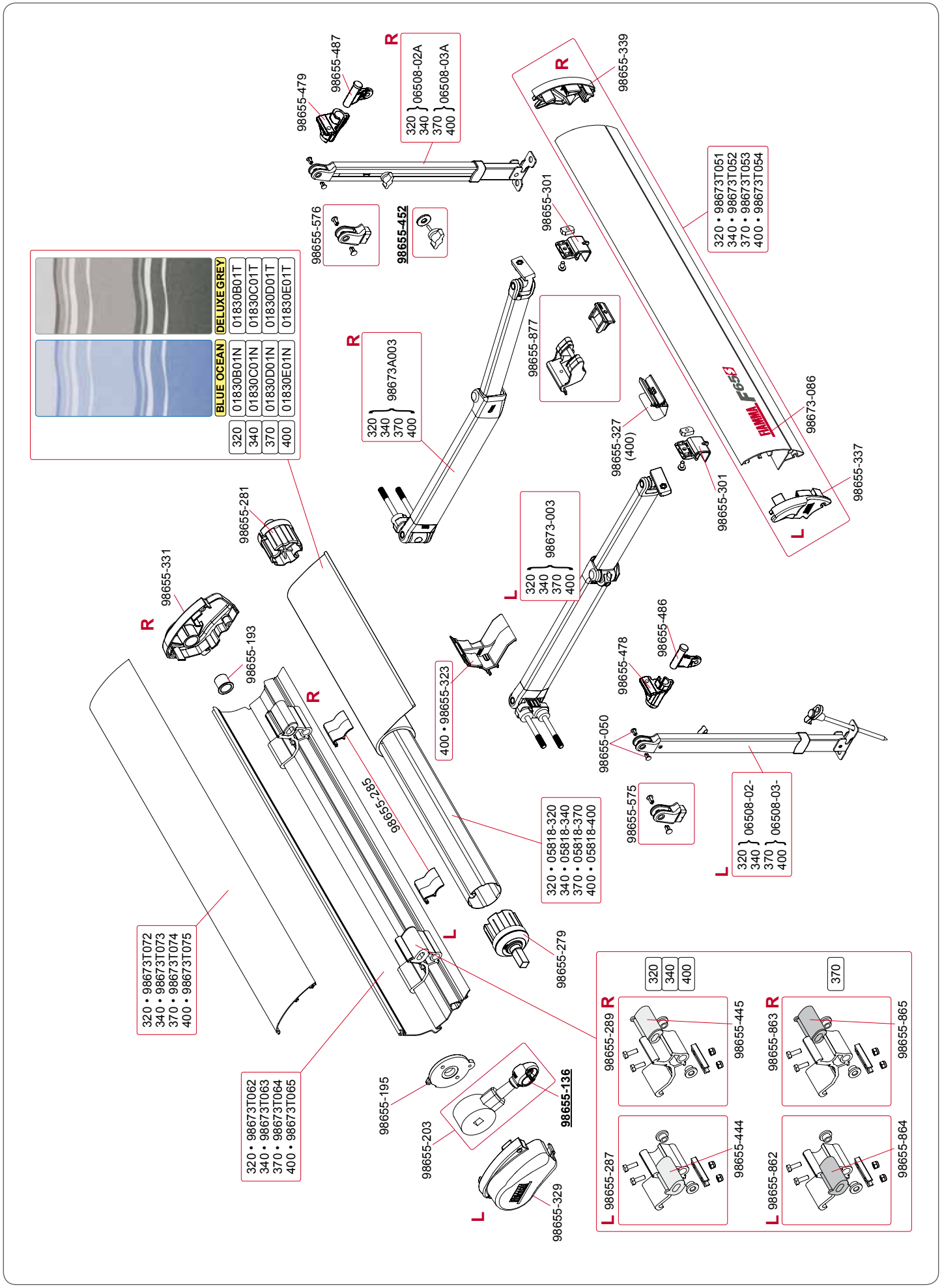

Deep Black 320-370-400 S/N > 9319000 (F701732)

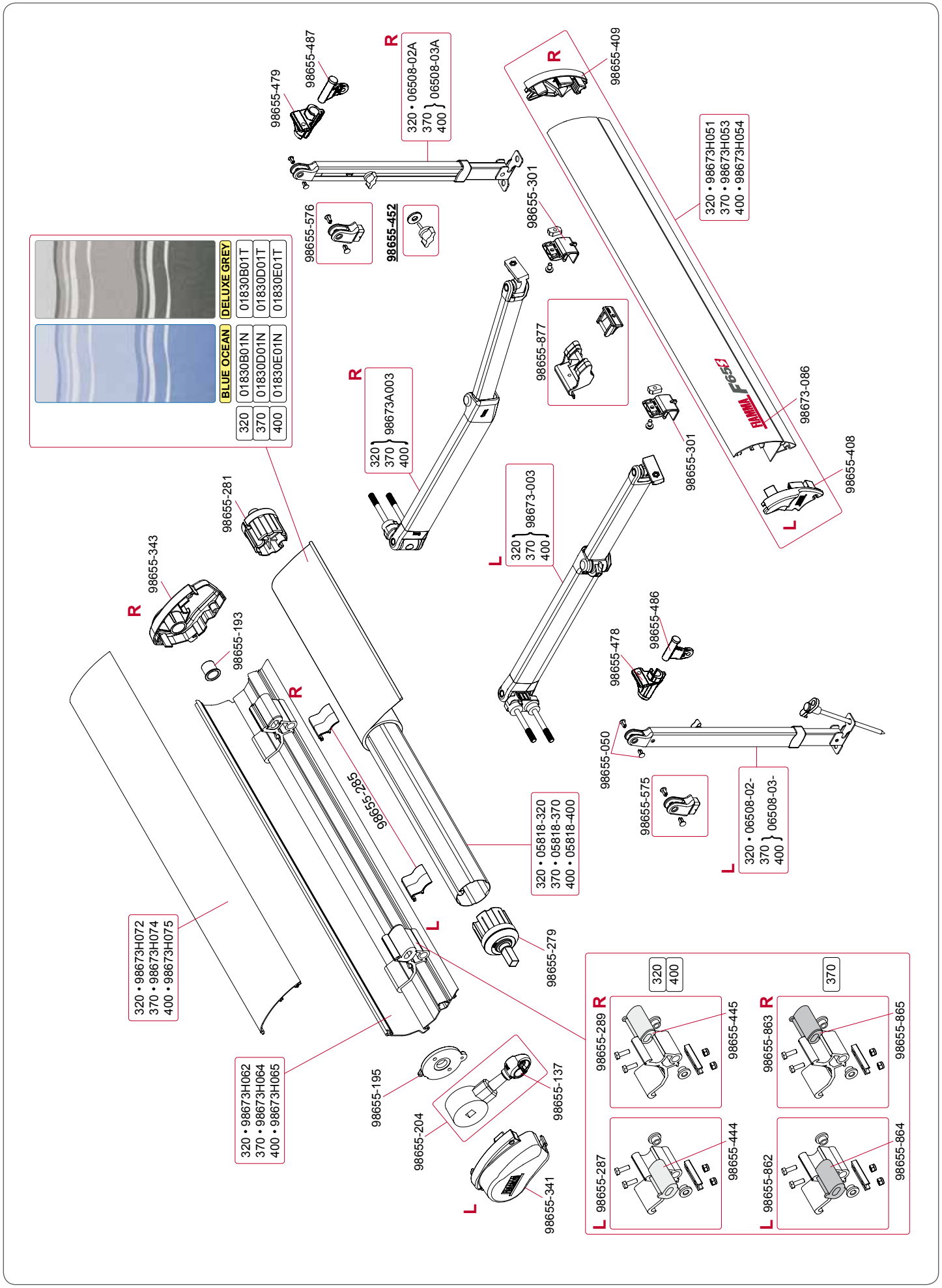

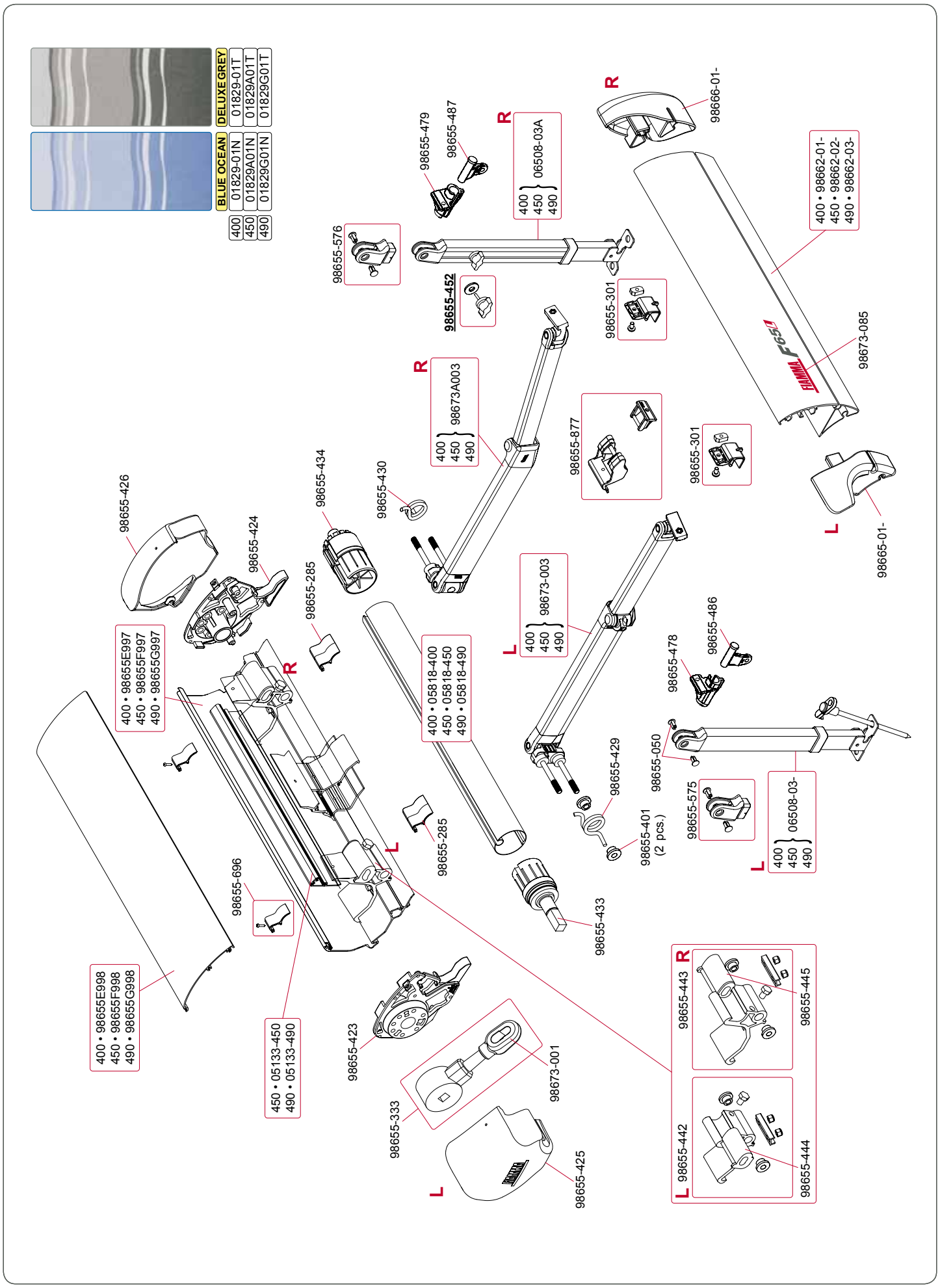
BLUE OCEAN
DELUXE GREY
400 01829-01N 01829-01T
450 01829A01N 01829A01T
490 01829G01N 01829G01T
98655-479
98655-487
R
400 450 490 06508-03A
R
98666-01-
400 • 98662-01-
450 • 98662-02-
490 • 98662-03-
98655-576
98655-452
98655-301
98673-085
R
400 450 490 98673A003
98655-877
98655-301
L
98665-01-
98655-426
98655-424
98655-434
98655-430
98655-285
L
400 450 490 98673-003
98655-486
98655-478
400 • 98655E997
450 • 98655F997
490 • 98655G997
R
400 • 05818-400
450 • 05818-450
490 • 05818-490
98655-050
98655-429
98655-575
98655-401
(2 pcs.)
L
400 450 490 06508-03-
L
98655-285
98655-696
98655-433
400 • 98655E998
450 • 98655F998
490 • 98655G998
450 • 05133-450
490 • 05133-490
98655-423
98655-333
98673-001
98655-425
L
R 98655-443
98655-445
L 98655-442
98655-444

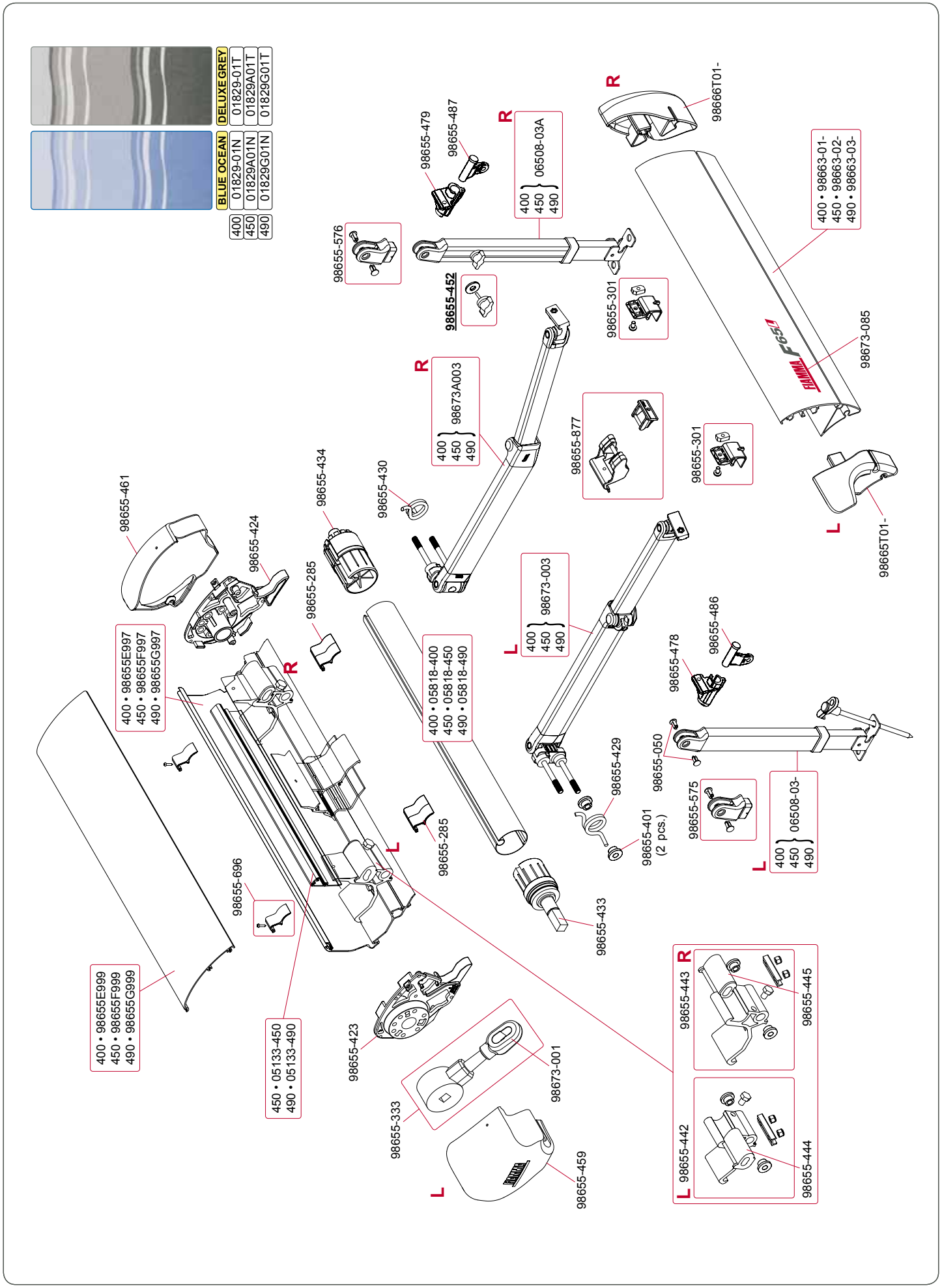
BLUE OCEAN
DELUXE GREY
400 01829-01N 01829-01T
450 01829A01N 01829A01T
490 01829G01N 01829G01T
98655-479
98655-487
R
400 450 490 06508-03A
98666T01-
400 • 98663-01-
450 • 98663-02-
490 • 98663-03-
98655-576
98655-452
98655-301
98673-085
R
400 450 490 98673A003
98655-877
98655-301
98665T01-
L
98655-461
98655-434
98655-430
98655-424
98655-285
400 • 98655E997
450 • 98655F997
490 • 98655G997
R
400 • 05818-400
450 • 05818-450
490 • 05818-490
L
400 450 490 98673-003
98655-486
98655-478
98655-429
98655-050
98655-575
98655-401
(2 pcs.)
L
400 450 490 06508-03-
98655-285
98655-696
98655-433
400 • 98655E999
450 • 98655F999
490 • 98655G999
450 • 05133-450
490 • 05133-490
98655-423
98655-333
98673-001
L
98655-459
R
98655-443
98655-445
L
98655-442
98655-444

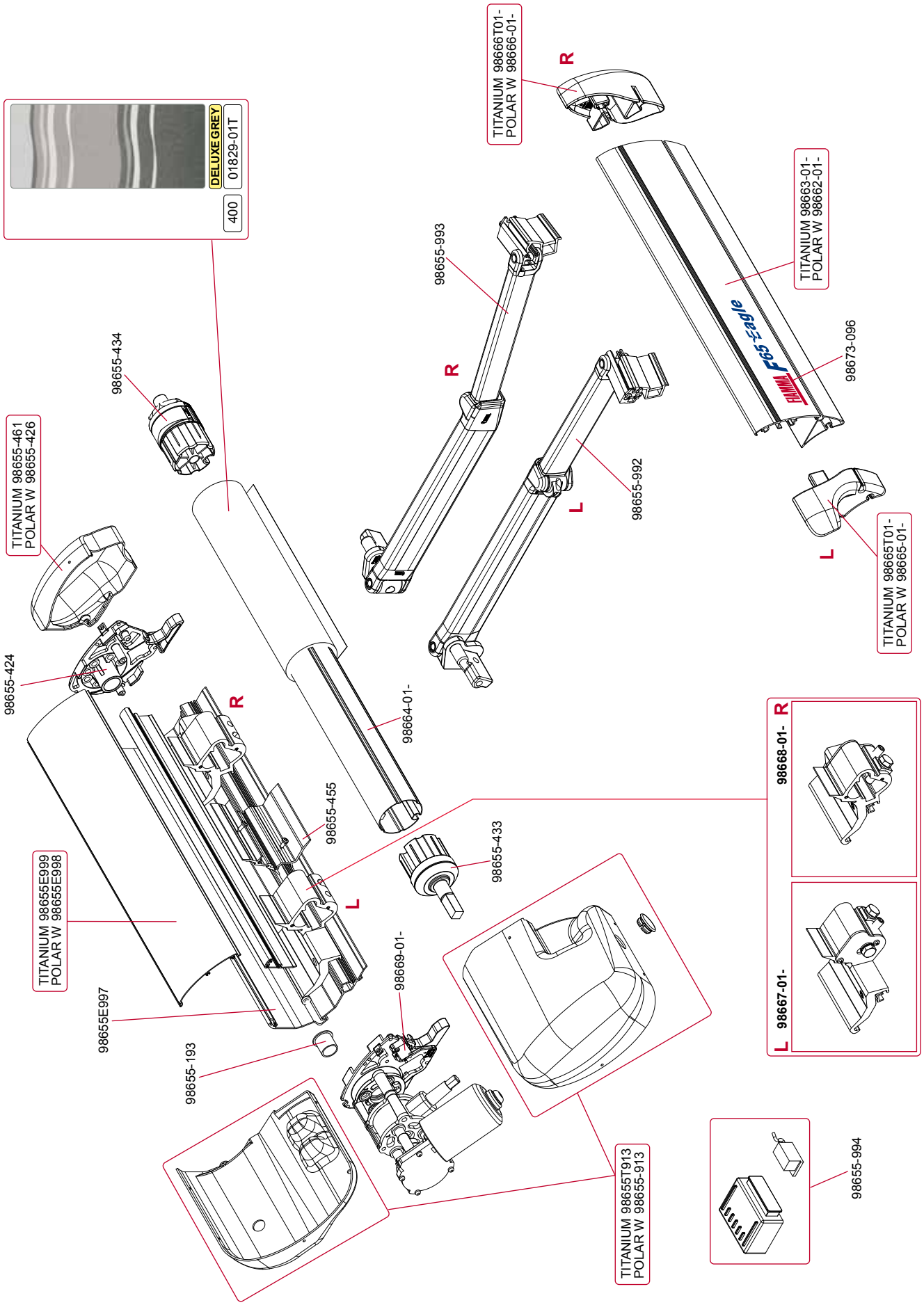
DELUXE GREY
01829-01T
400
TITANIUM 98666T01-
POLAR W 98666-01-
R
98655-993
R
TITANIUM 98663-01-
POLAR W 98662-01-
98673-096
98655-434
TITANIUM 98655-461
POLAR W 98655-426
98655-992
L
L
TITANIUM 98665T01-
POLAR W 98665-01-
98655-424
R
98664-01-
98655-455
98655-433
L
TITANIUM 98655E999
POLAR W 98655E998
98669-01-
98655E997
98655-193
L 98667-01-
98668-01- R
TITANIUM 98655T913
POLAR W 98655-913
98655-994

Polar White 260-400

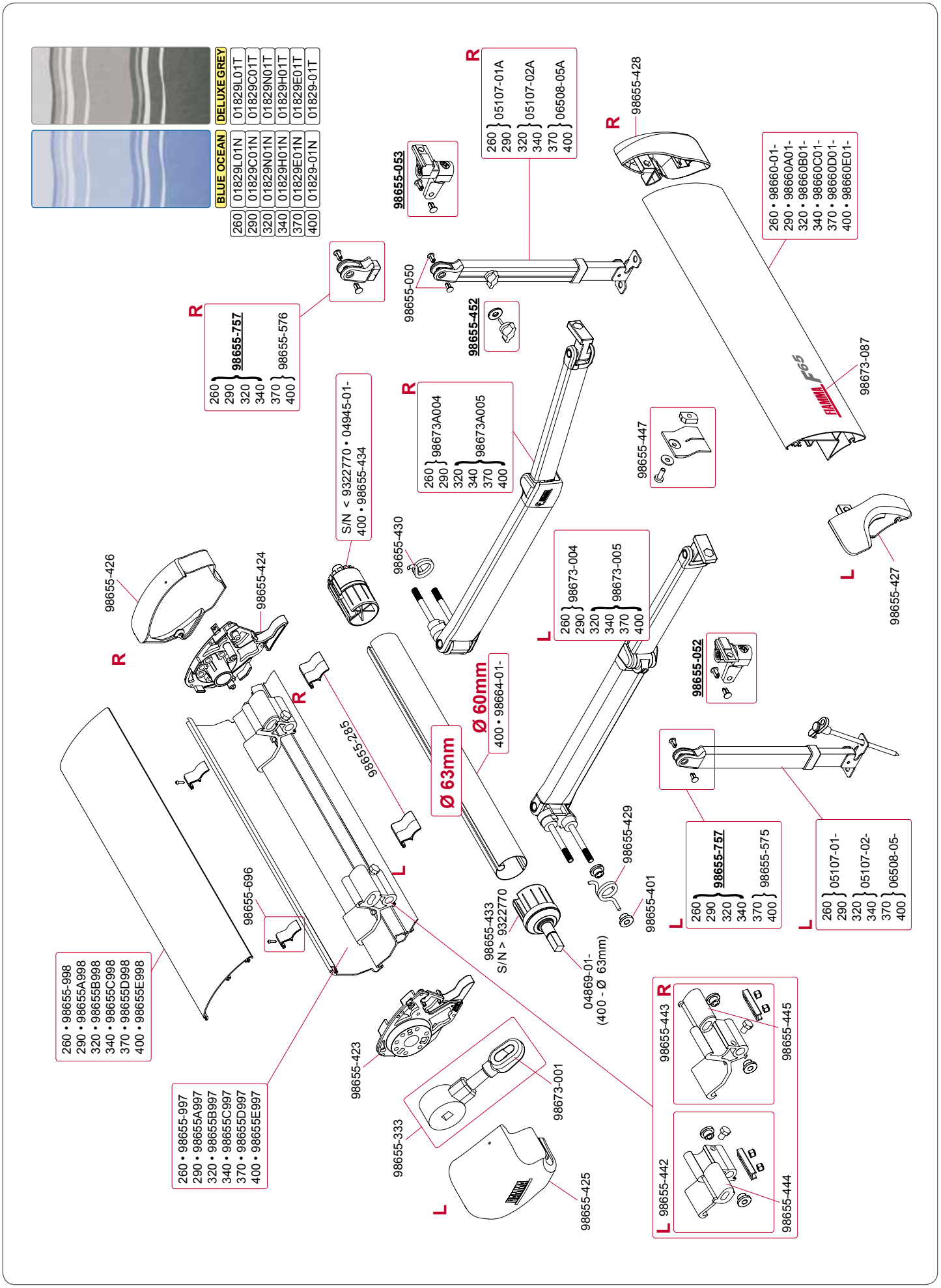

Titanium 290-400 S/N > 9308000

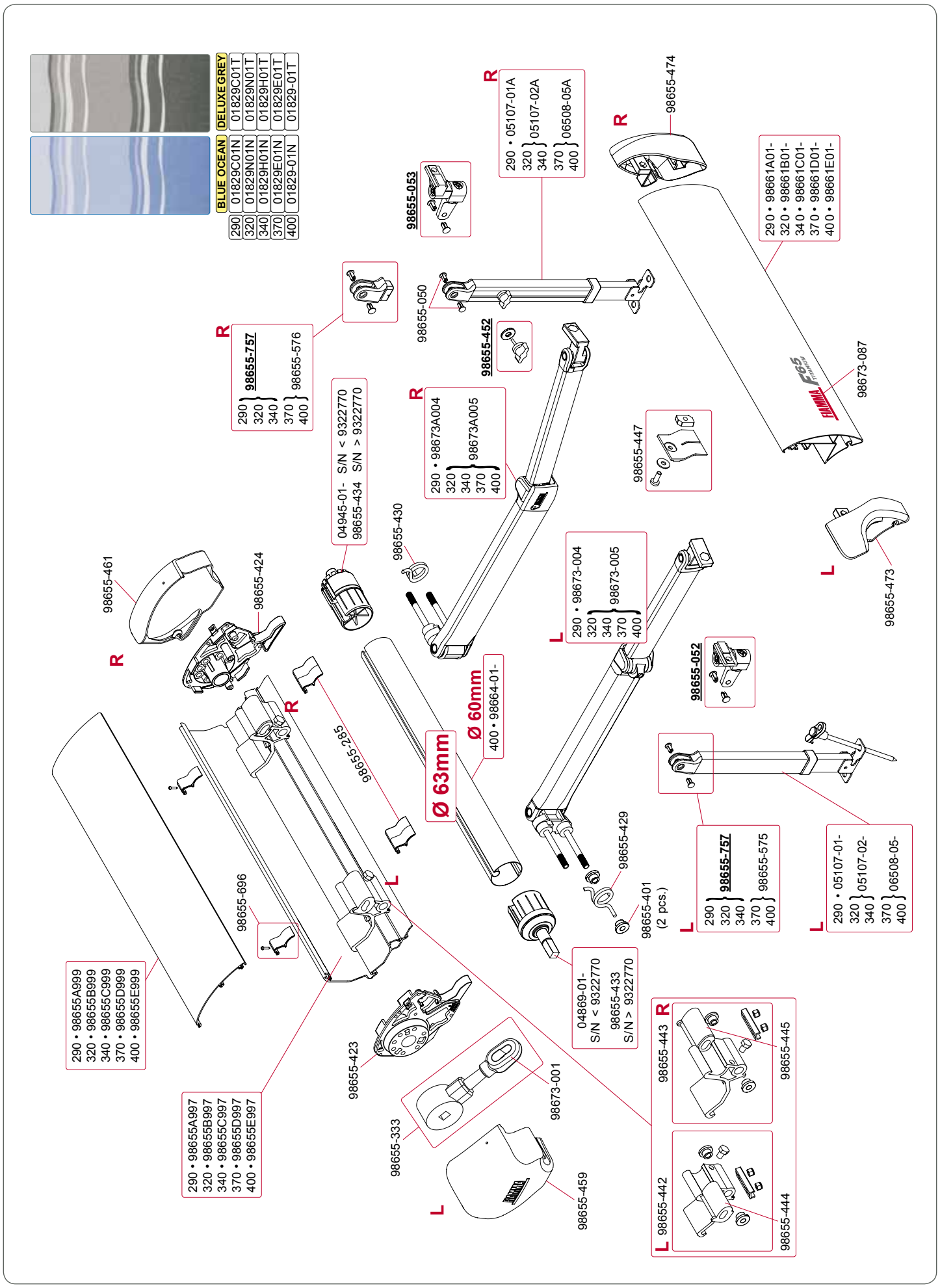

Polar White - Titanium 450-490

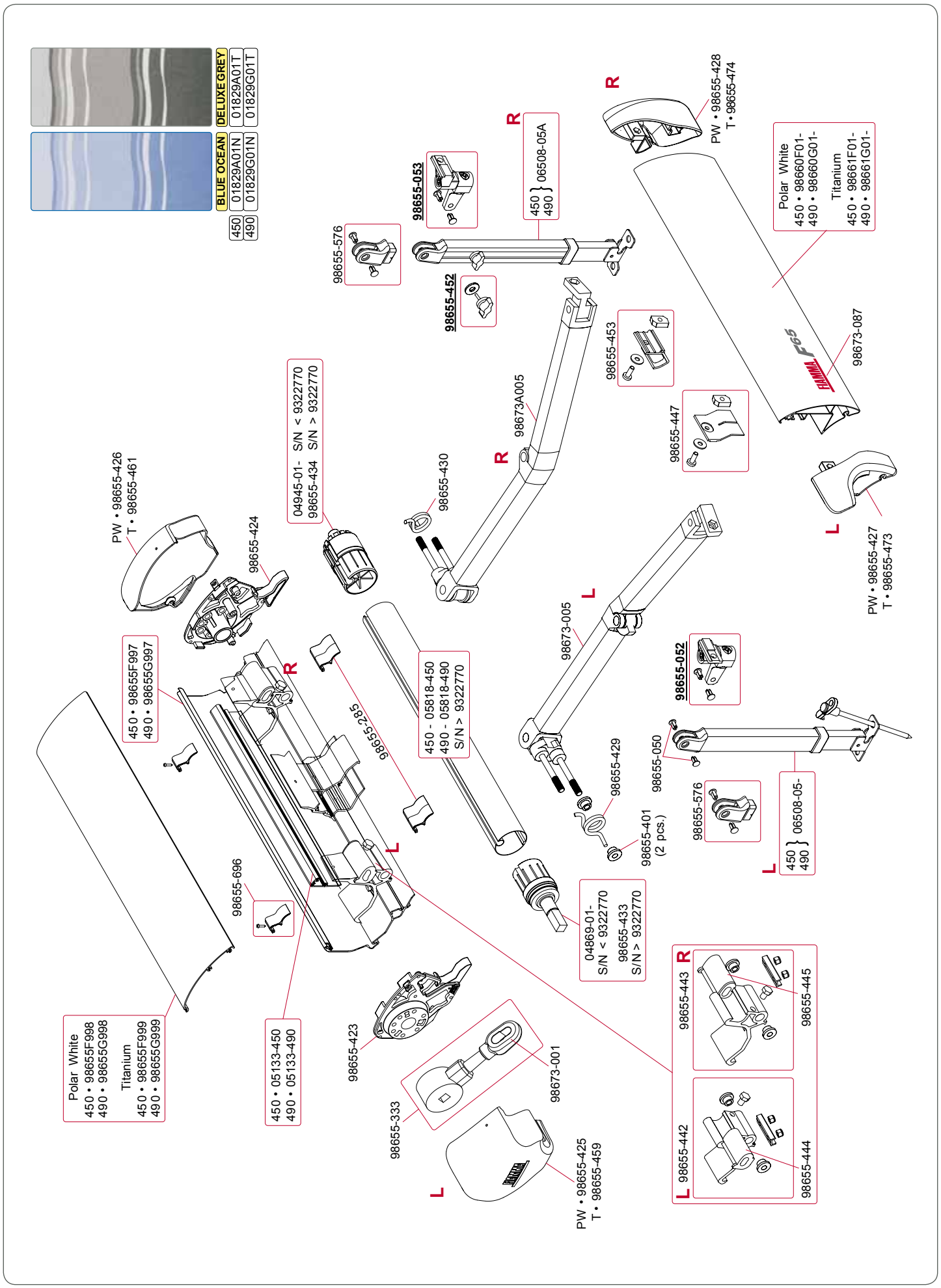

190-255 Version 2013 S/N > 9580700 (F701991)

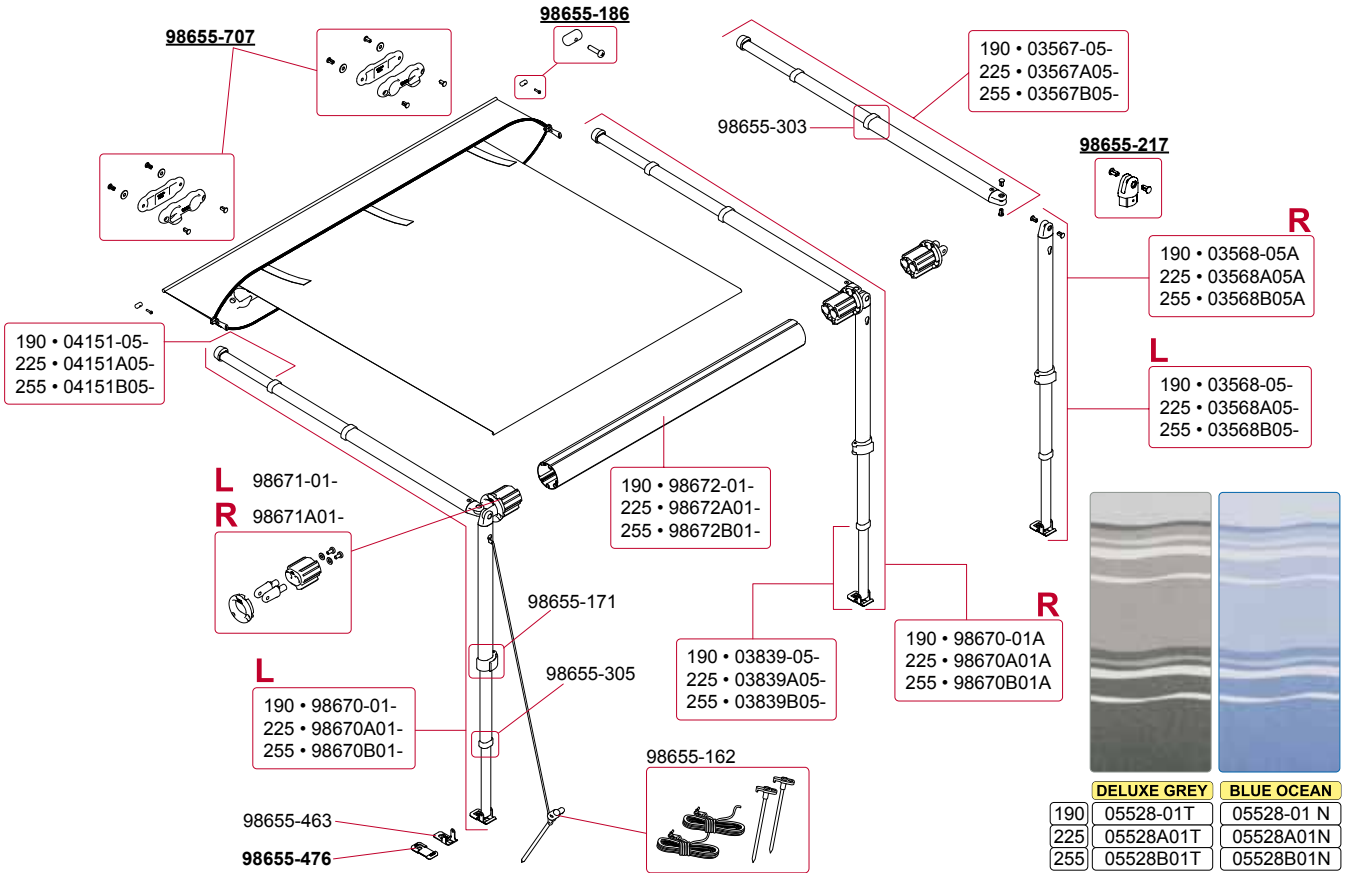

	DELUXE GREY	BLUE OCEAN
190	05528-01T	05528-01 N
225	05528A01T	05528A01N
255	05528B01T	05528B01N

280-440 Version 2013 S/N > 9580700 (F701991)

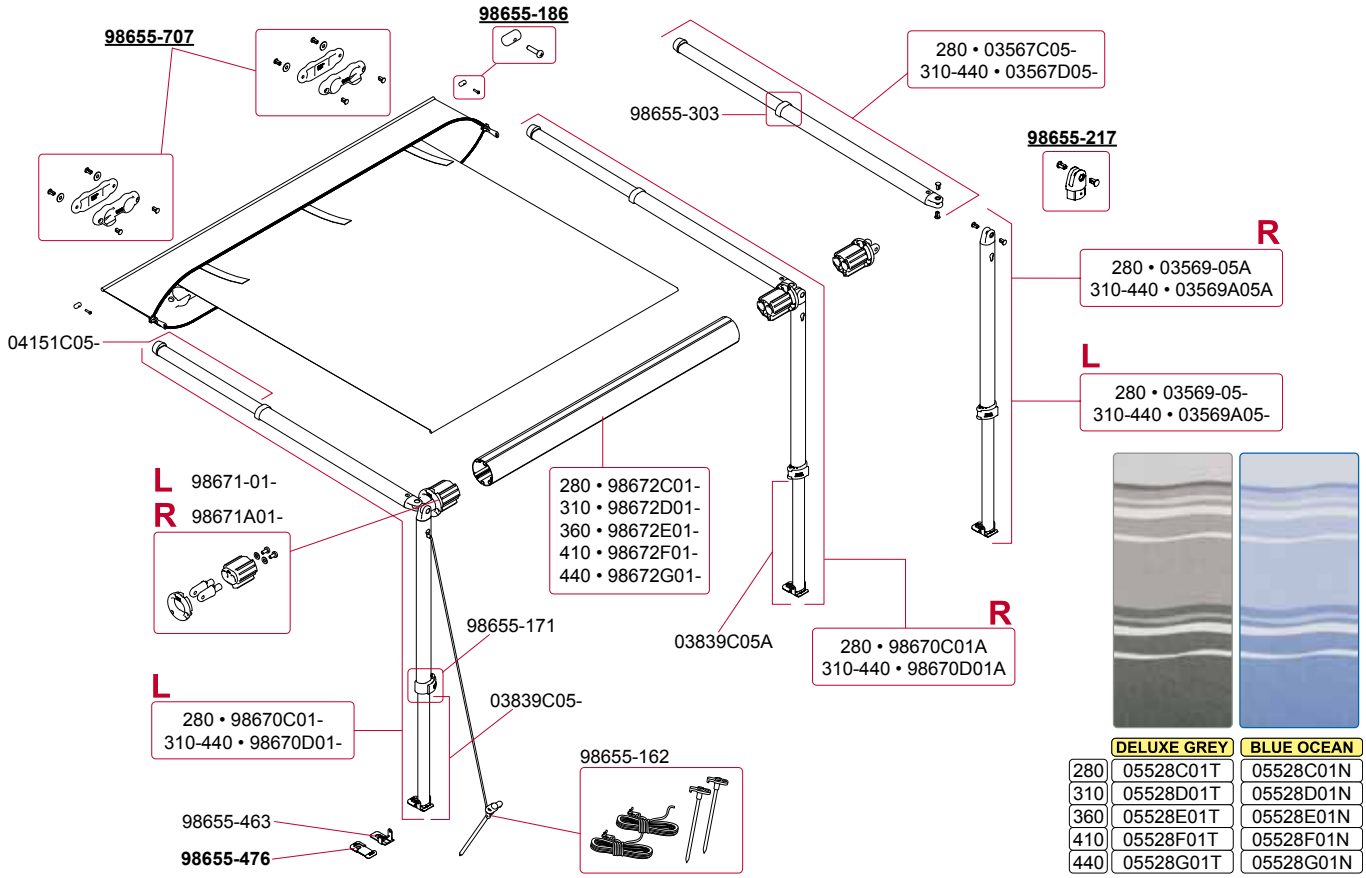

	DELUXE GREY	BLUE OCEAN
280	05528C01T	05528C01N
310	05528D01T	05528D01N
360	05528E01T	05528E01N
410	05528F01T	05528F01N
440	05528G01T	05528G01N

CARAVANSTORE HAMMA

190-255 Version 2007 S/N > 9389000

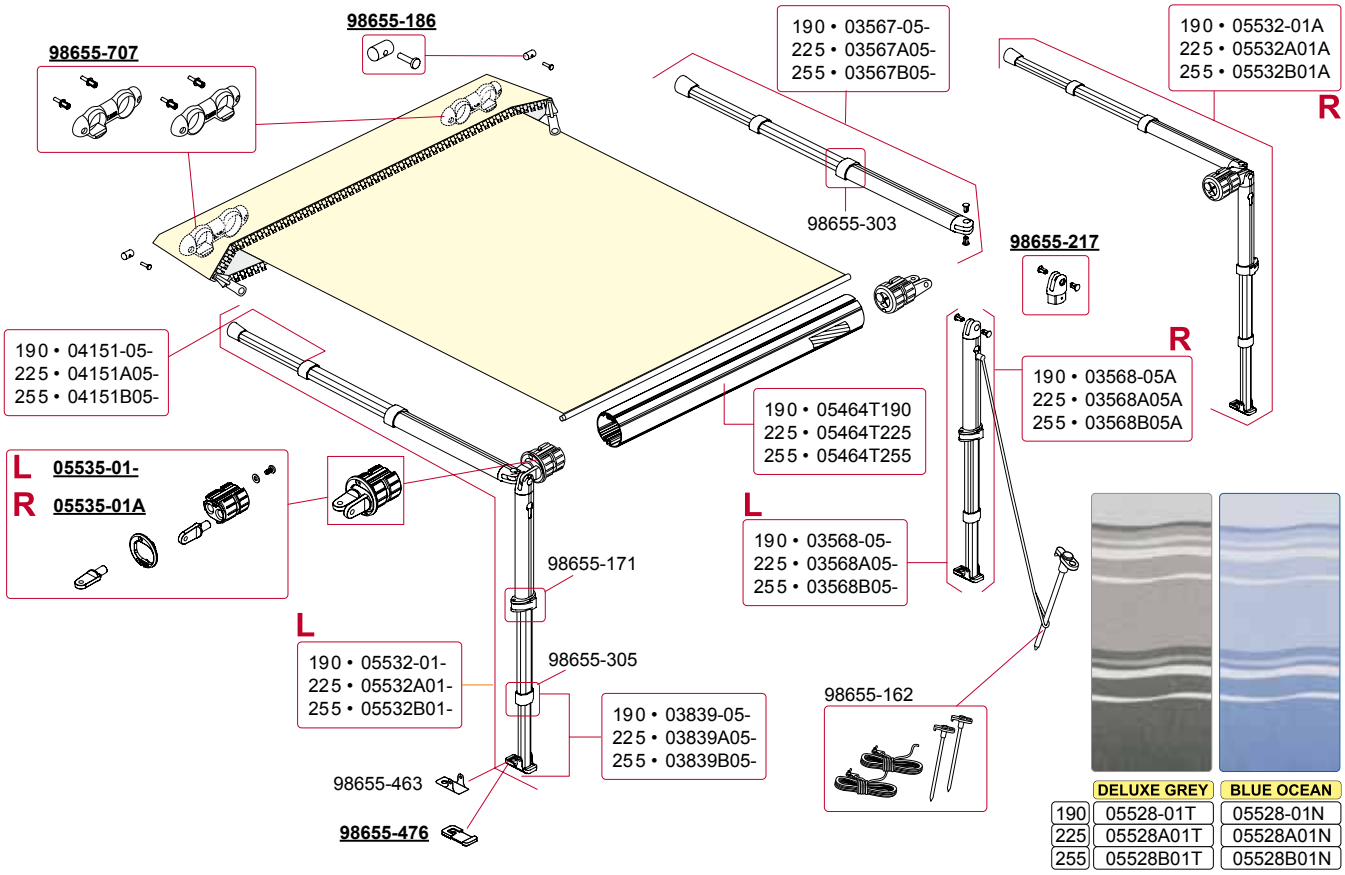

	DELUXE GREY	BLUE OCEAN
190	05528-01T	05528-01N
225	05528A01T	05528A01N
255	05528B01T	05528B01N

CARAVANSTORE HAMMA

280-440 Version 2007 S/N > 9389000

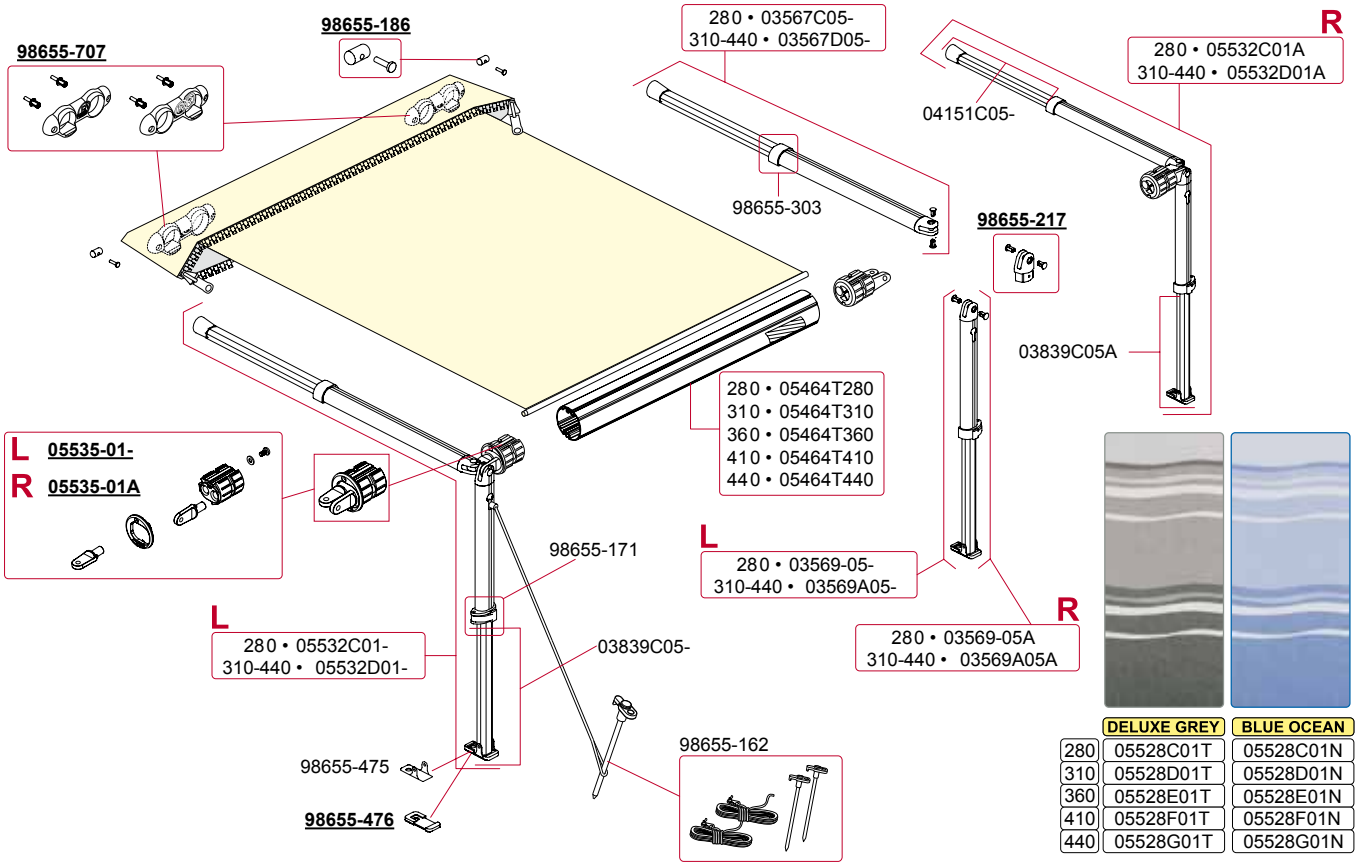

	DELUXE GREY	BLUE OCEAN
280	05528C01T	05528C01N
310	05528D01T	05528D01N
360	05528E01T	05528E01N
410	05528F01T	05528F01N
440	05528G01T	05528G01N

190-255 Version 2005

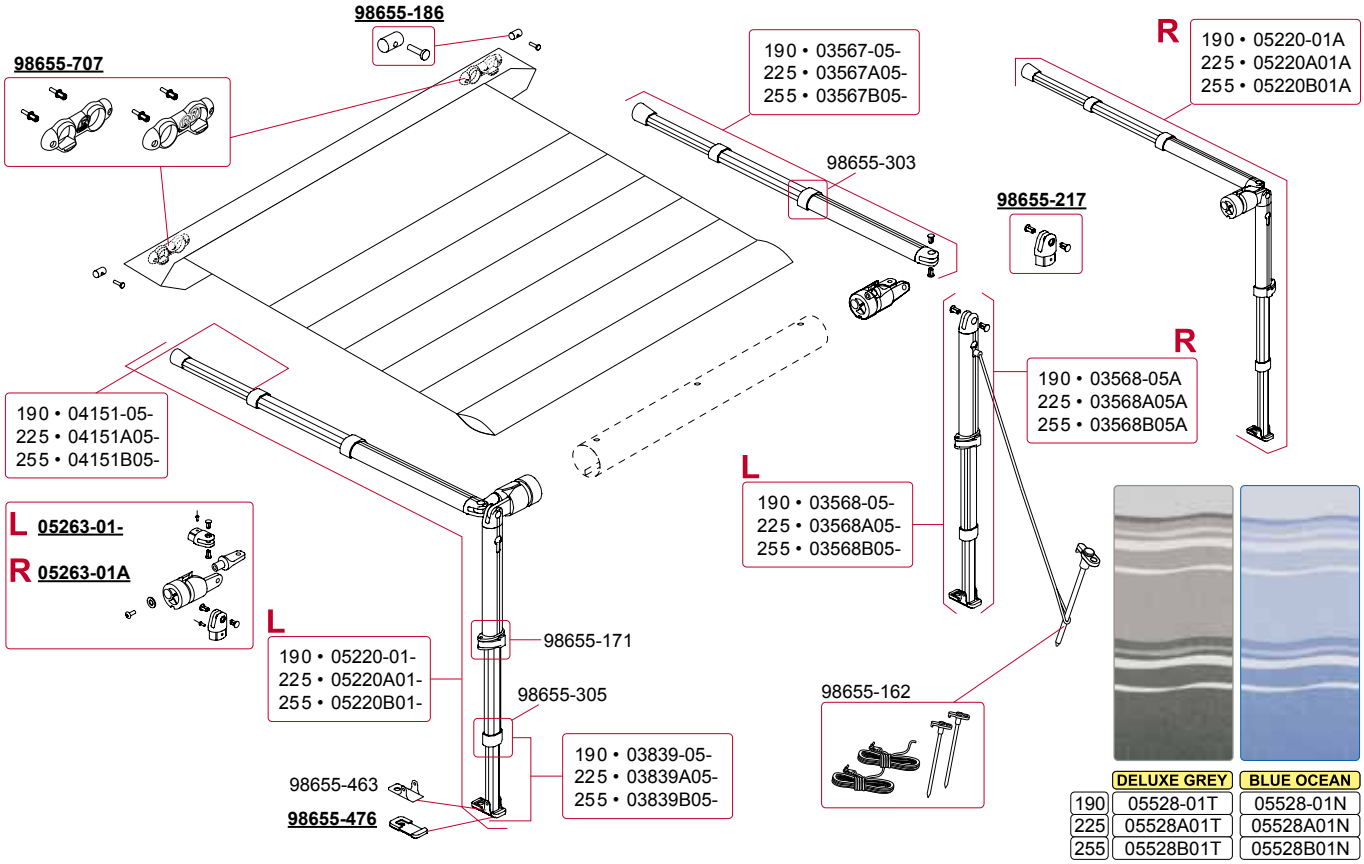

	DELUXE GREY	BLUE OCEAN
190	05528-01T	05528-01N
225	05528A01T	05528A01N
255	05528B01T	05528B01N

280-440 Version 2005

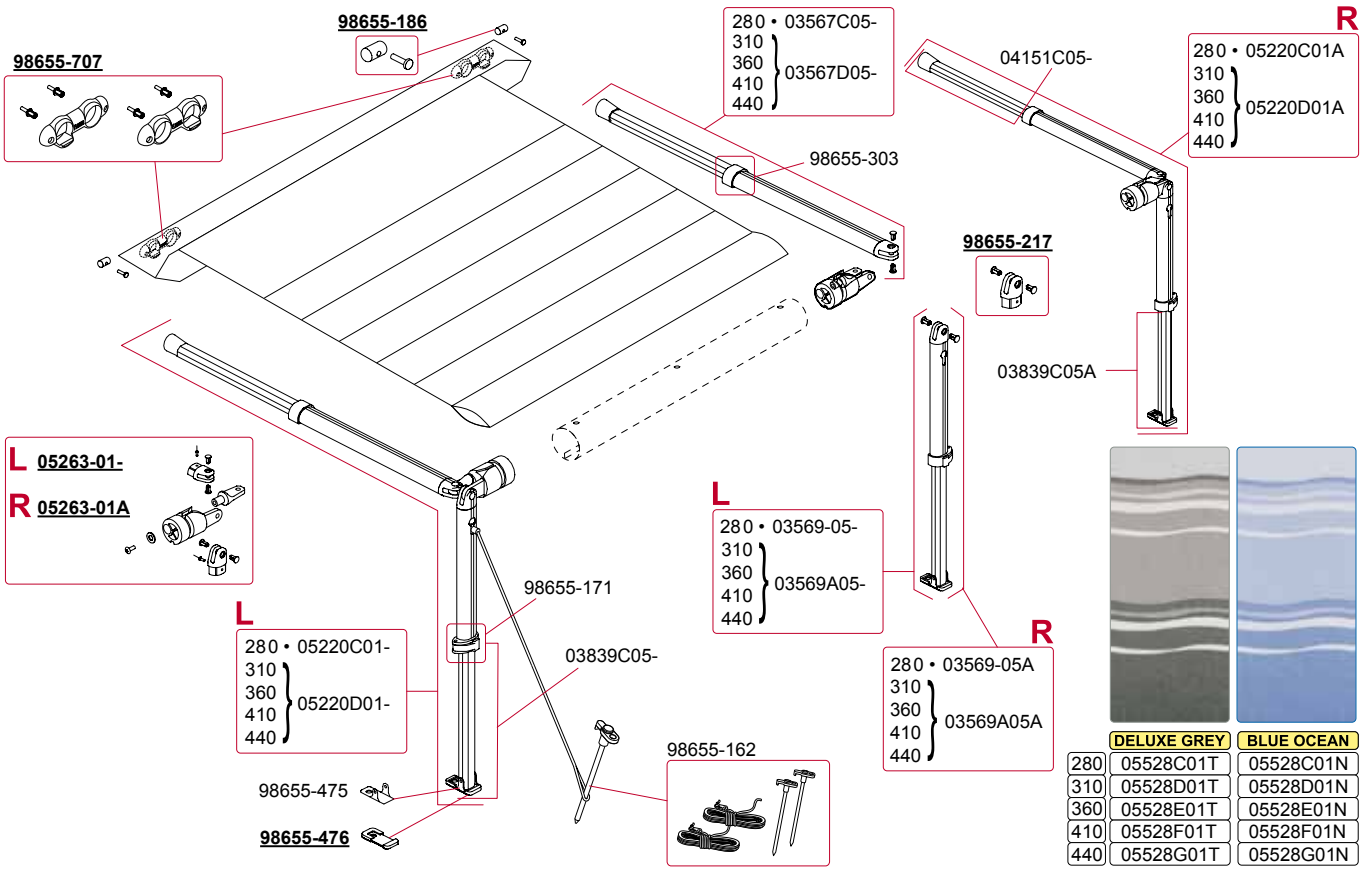

	DELUXE GREY	BLUE OCEAN
280	05528C01T	05528C01N
310	05528D01T	05528D01N
360	05528E01T	05528E01N
410	05528F01T	05528F01N
440	05528G01T	05528G01N

Titanium 180-250 Version 2013 S/N > 9357900 (F701991)

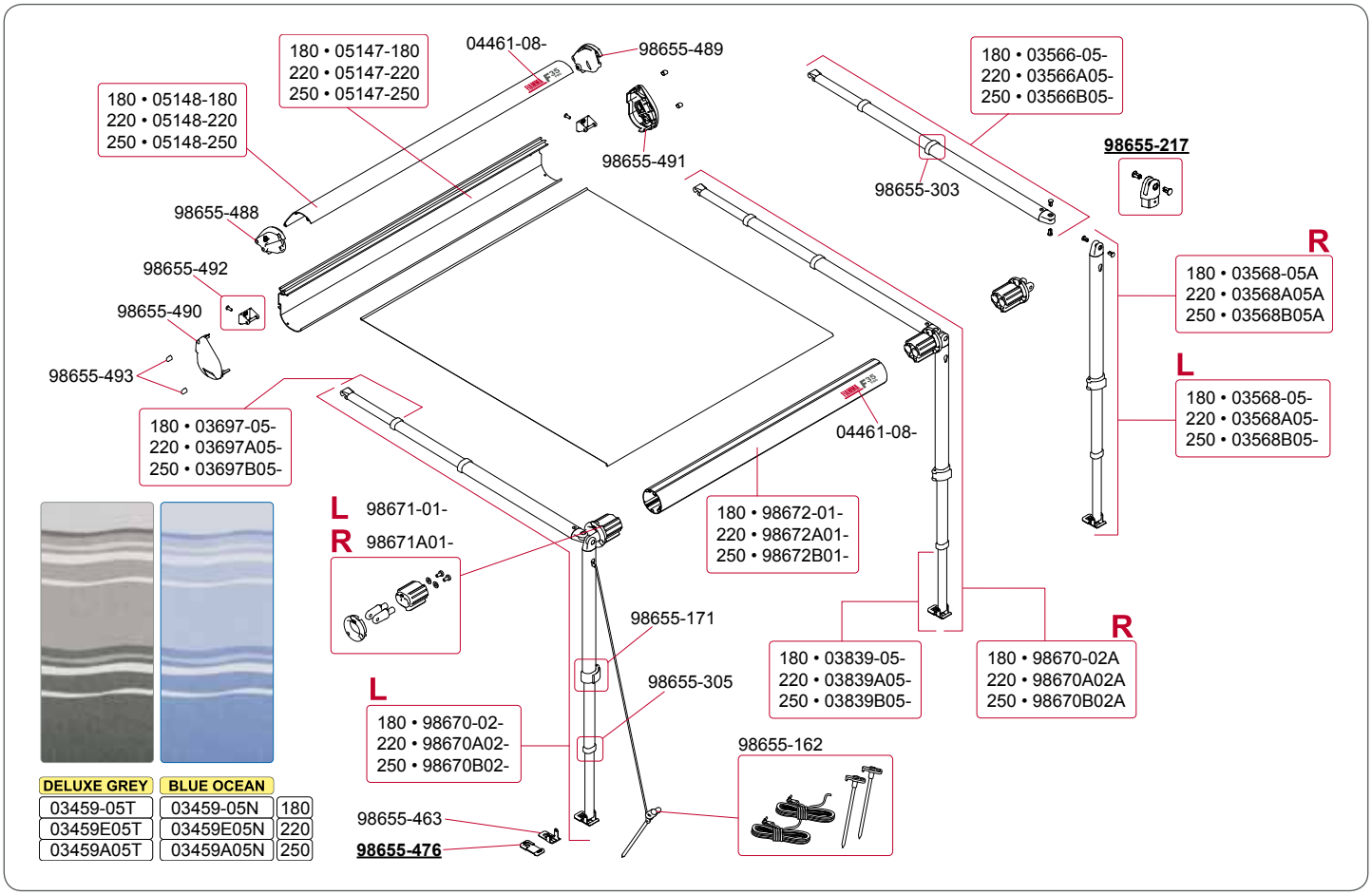

Titanium 270-300 - Deep Black 270 Version 2013 S/N > 9357900 (F701991)

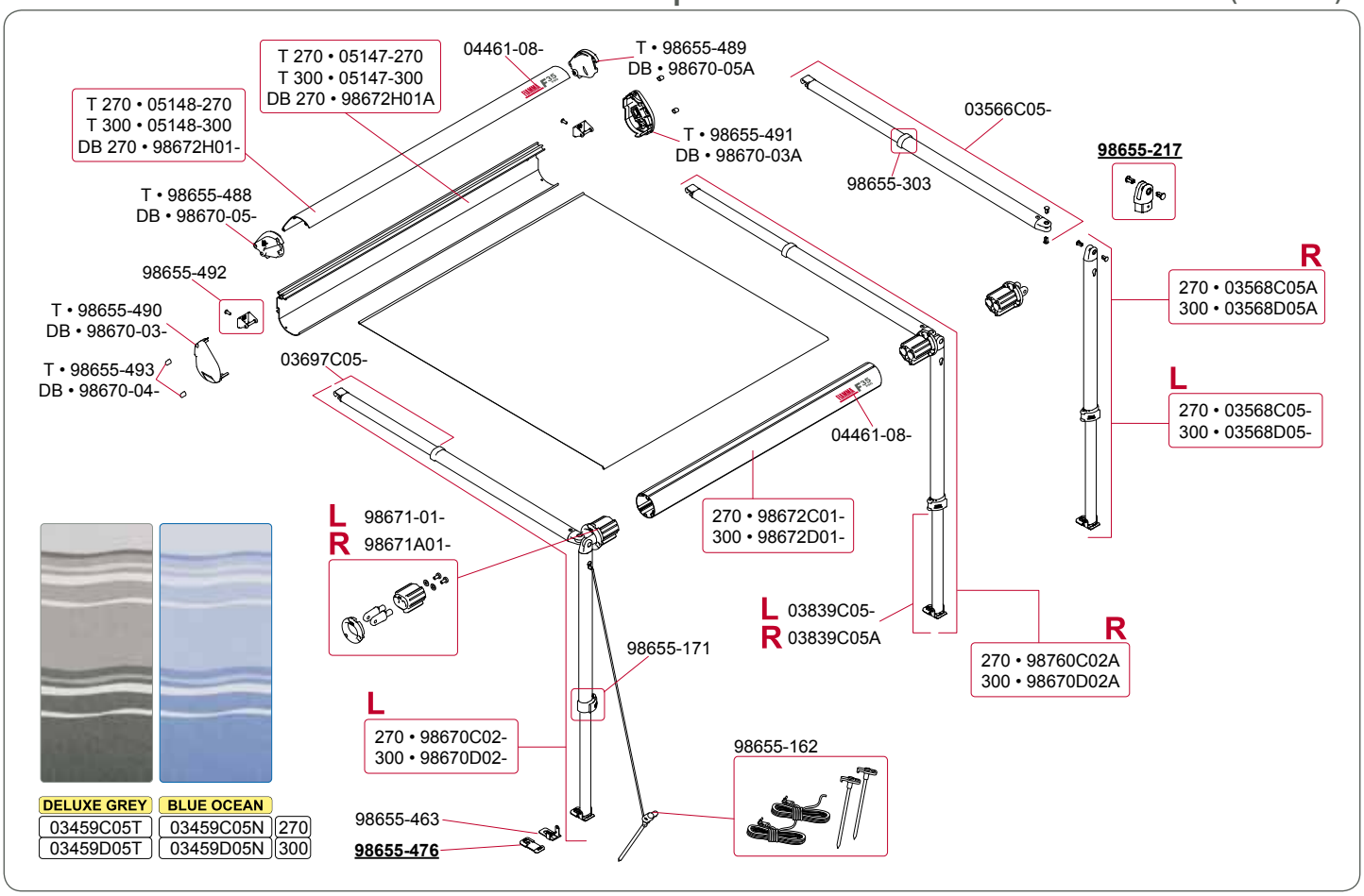

180-250 Version 2007 S/N > 9307000 (F700045)

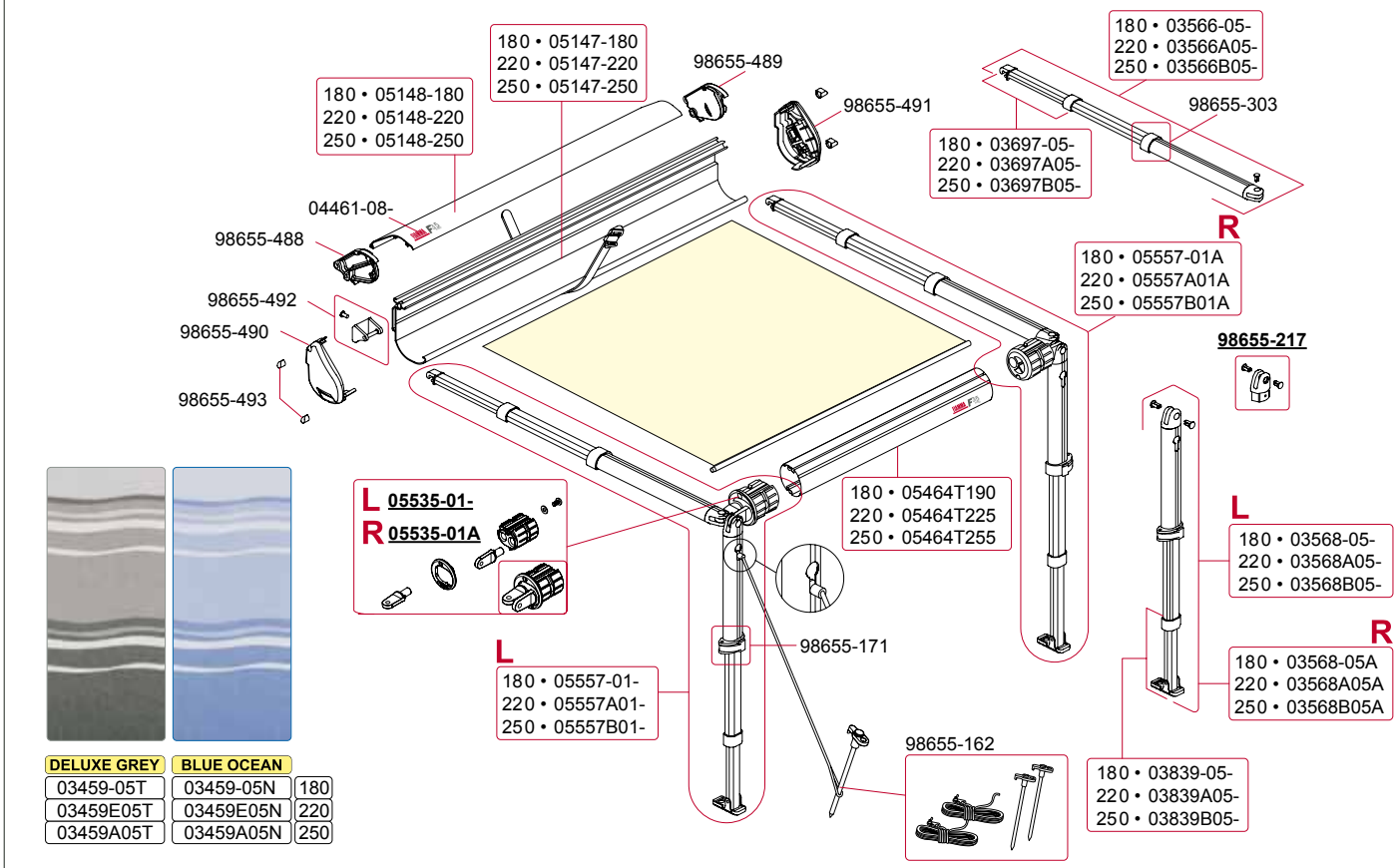

DELUXE GREY	BLUE OCEAN	
03459-05T	03459-05N	180
03459E05T	03459E05N	220
03459A05T	03459A05N	250

270-300 Version 2007 S/N > 930700 (F700045)

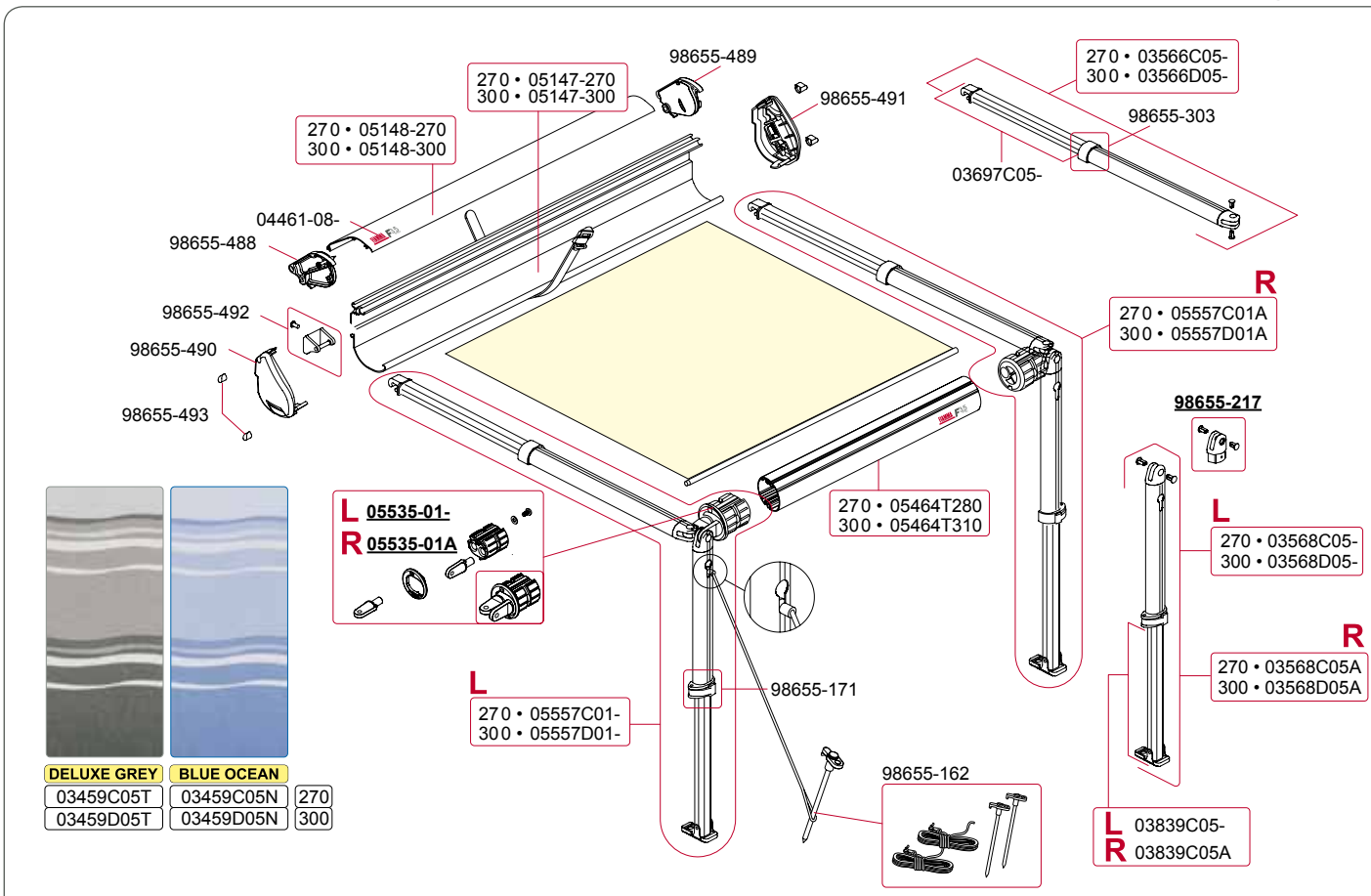

DELUXE GREY	BLUE OCEAN	
03459C05T	03459C05N	270
03459D05T	03459D05N	300

FIAMMA F35 PRO

180-250 Version 2005

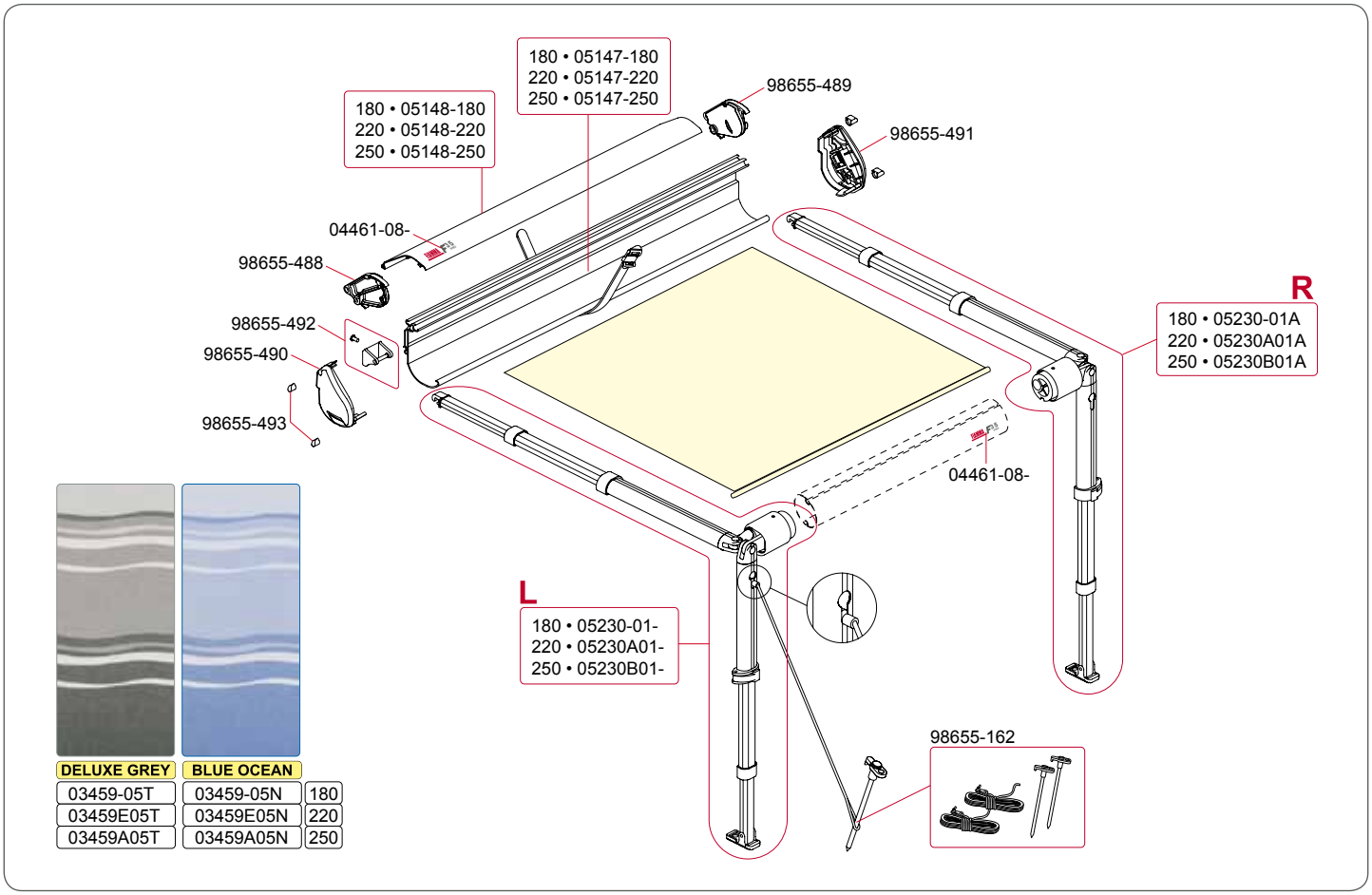

DELUXE GREY	BLUE OCEAN	
03459-05T	03459-05N	180
03459E05T	03459E05N	220
03459A05T	03459A05N	250

FIAMMA F35 PRO

270-300 Version 2005

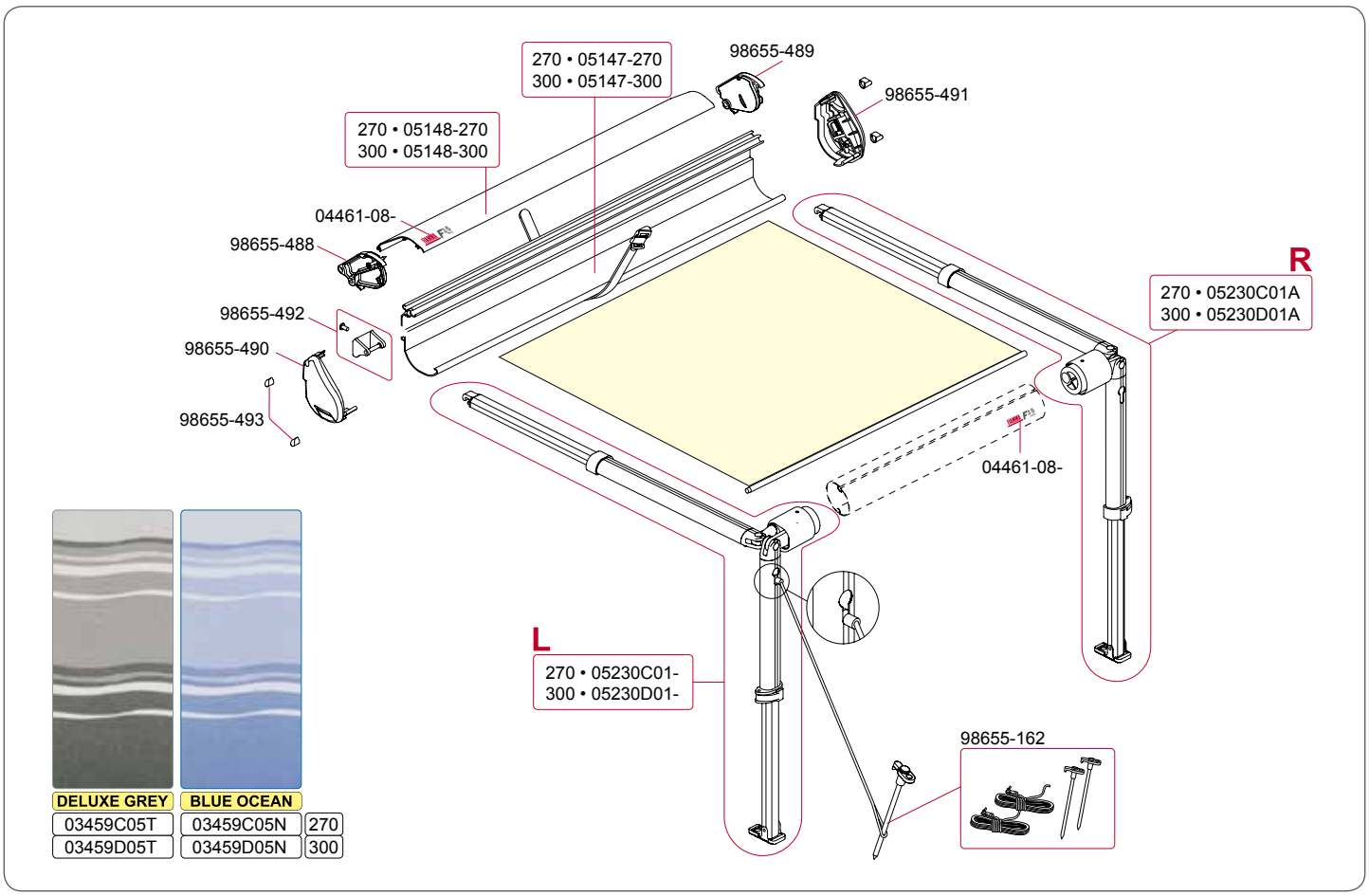

DELUXE GREY	BLUE OCEAN	
03459C05T	03459C05N	270
03459D05T	03459D05N	300

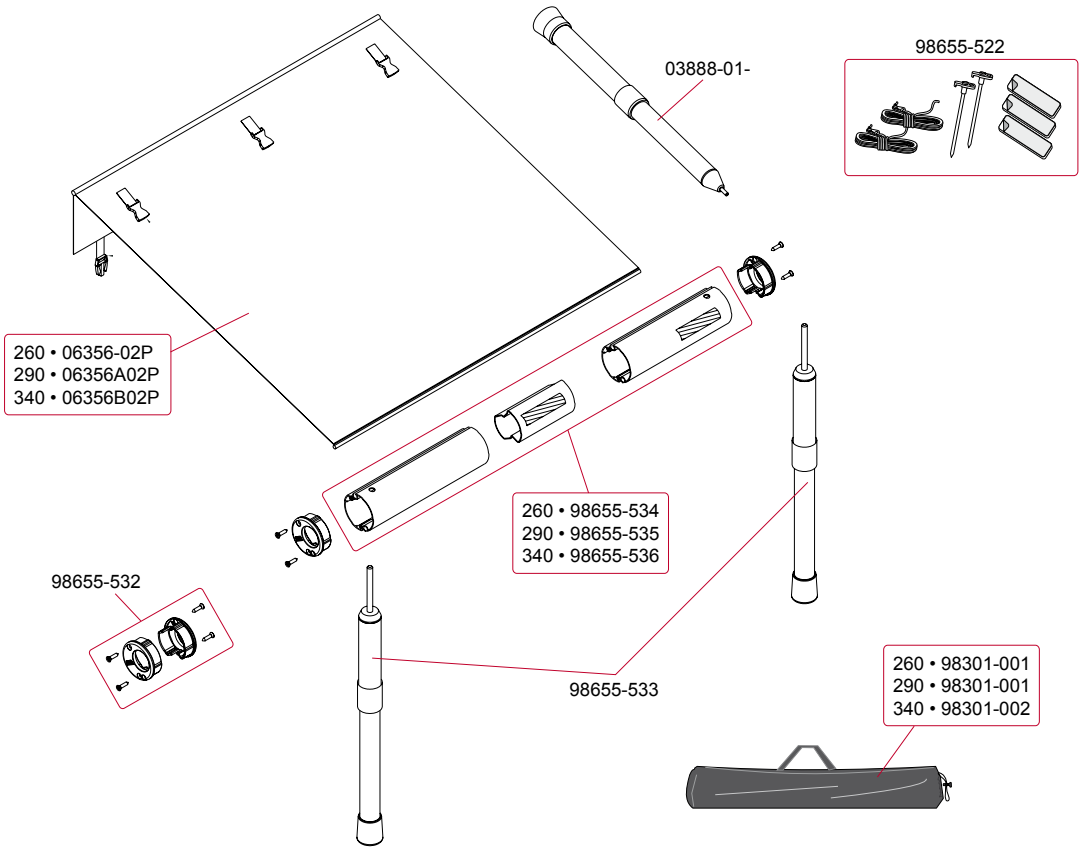

FIAMMA W35

135-195 S/N > 9307000 (F700045)

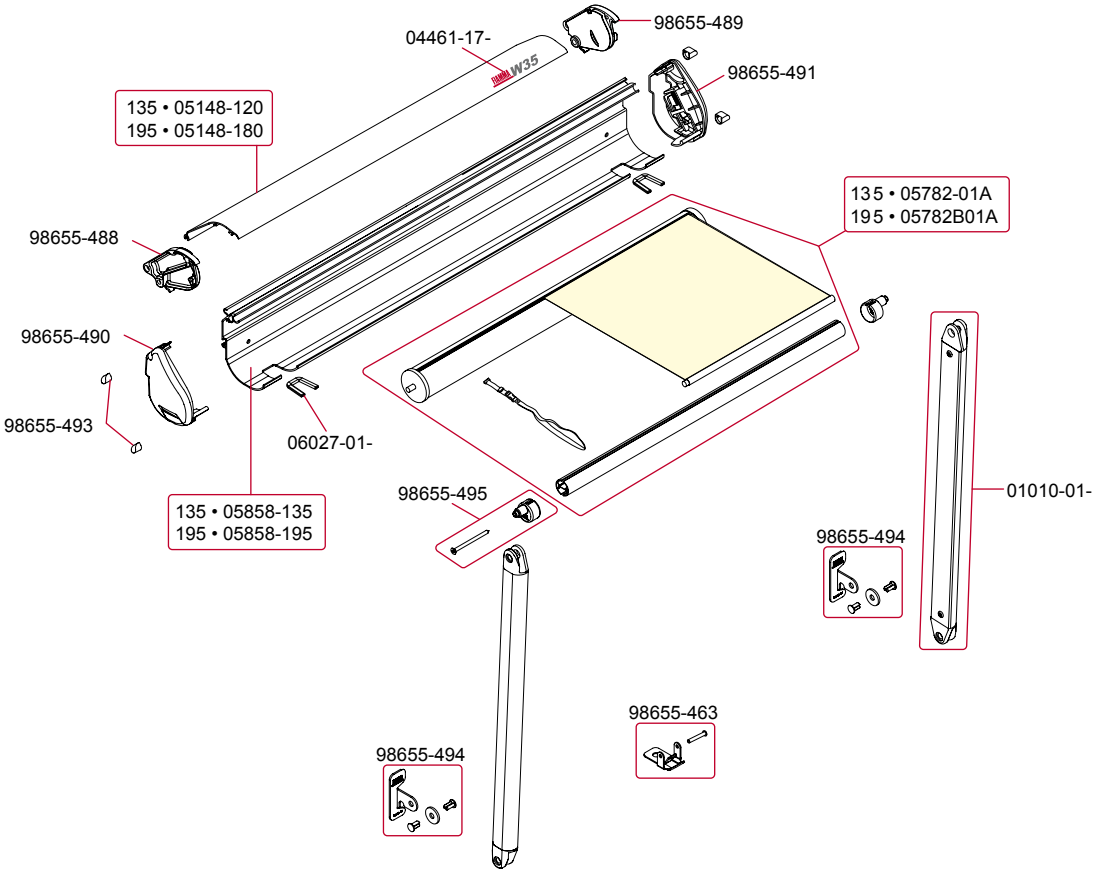

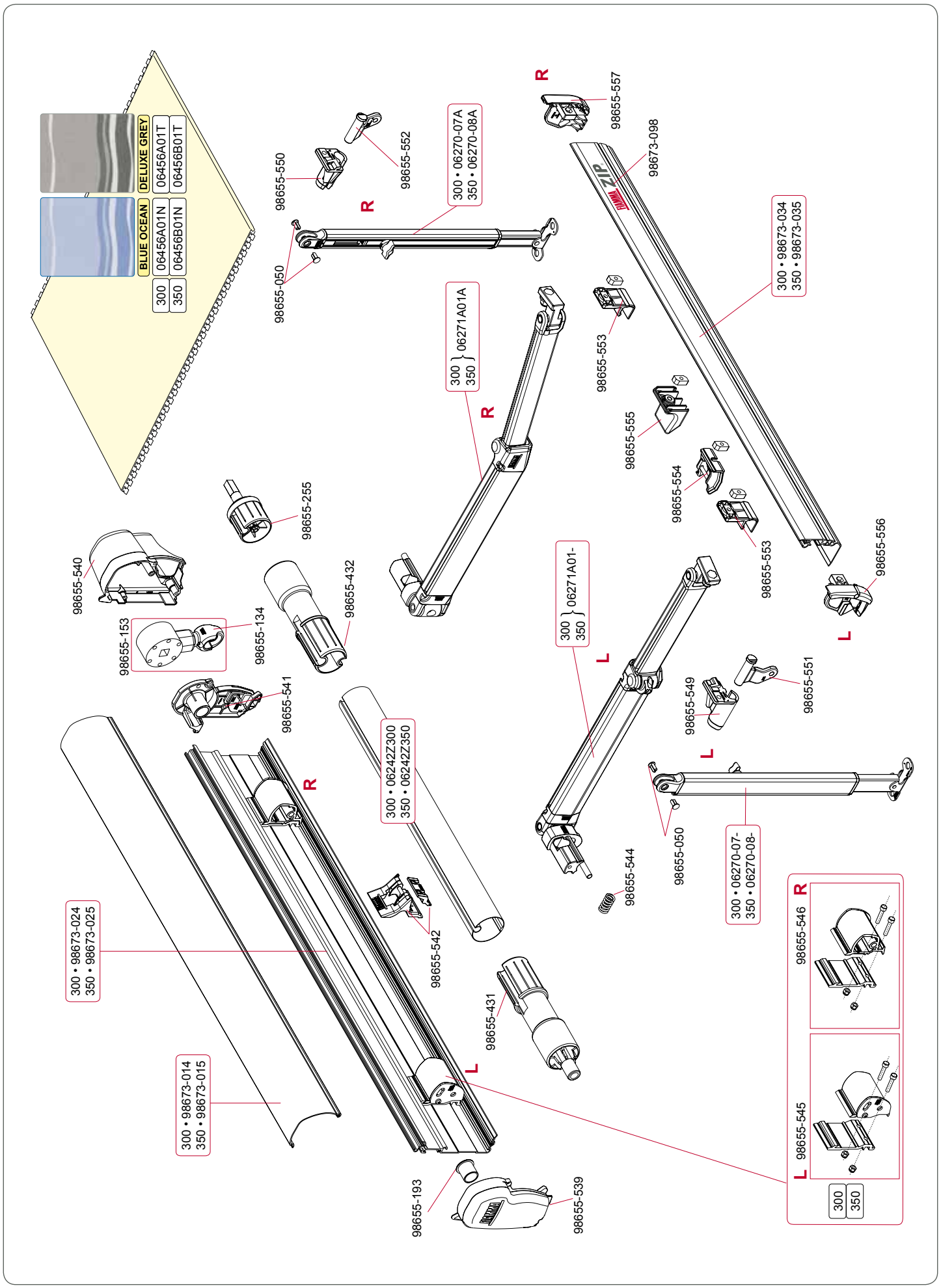
BLUE OCEAN
DELUXE GREY
300
350
06456A01N
06456B01N
06456A01T
06456B01T
98655-550
98655-552
98655-050
300 • 06270-07A
350 • 06270-08A
R
98655-557
98673-098
300 • 98673-034
350 • 98673-035
300 } 06271A01A
350
98655-553
98655-555
98655-554
98655-553
98655-556
98655-255
98655-540
98655-153
98655-134
98655-432
98655-541
300 } 06271A01-
350
L
98655-549
98655-551
300 • 06242Z300
350 • 06242Z350
98655-050
300 • 06270-07-
350 • 06270-08-
98655-544
300 • 98673-024
350 • 98673-025
98655-542
98655-431
300 • 98673-014
350 • 98673-015
98655-193
98655-539
98655-546
98655-545
300
350

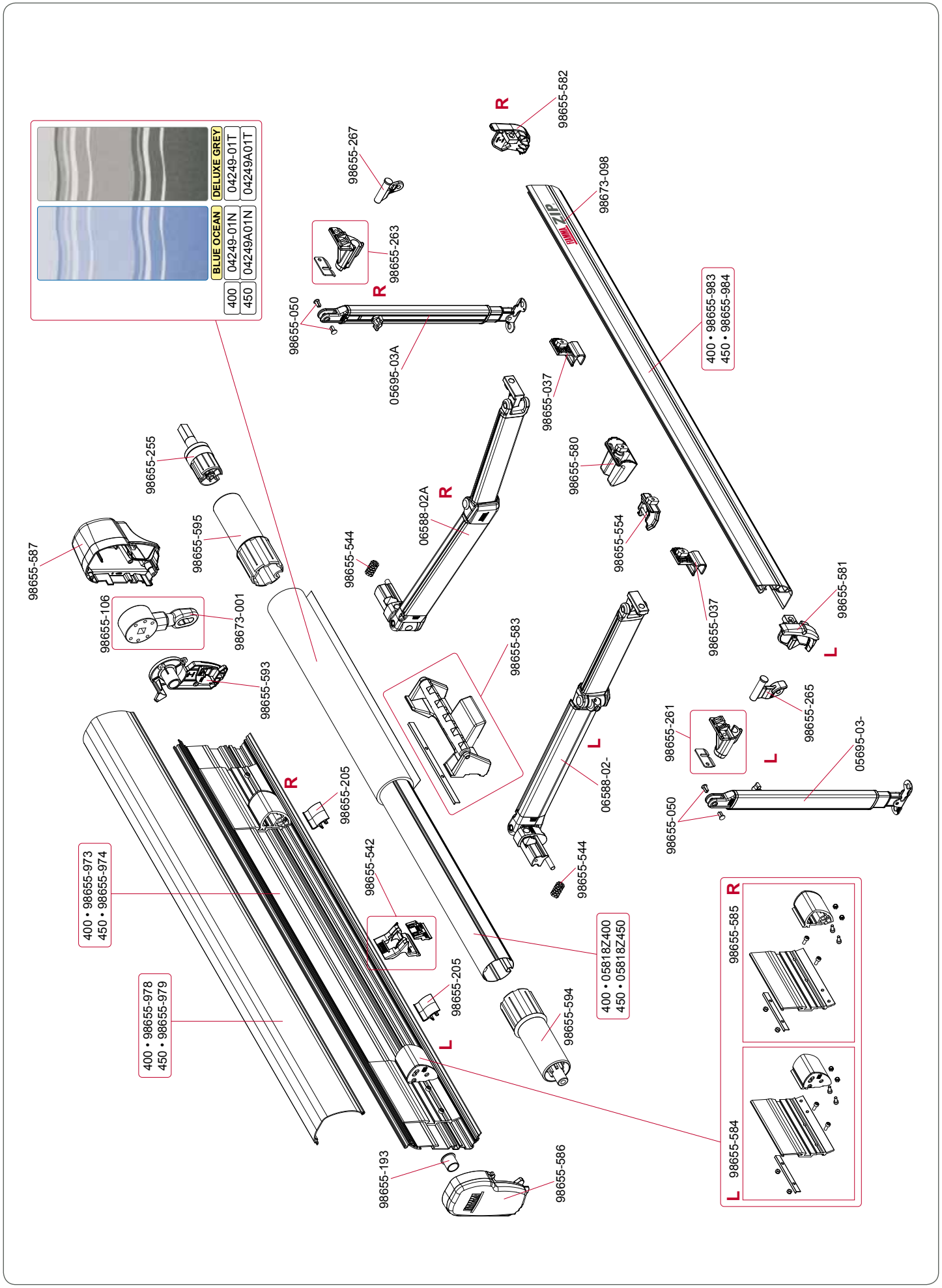
BLUE OCEAN
DELUXE GREY
400
04249-01N
04249-01T
450
04249A01N
04249A01T
98655-582
98655-267
98673-098
98655-263
98655-050
05695-03A
400 • 98655-983
450 • 98655-984
98655-037
98655-255
98655-580
06588-02A
98655-595
98655-544
98655-554
98655-587
98655-581
98655-106
98673-001
98655-037
98655-583
98655-593
98655-265
98655-261
05695-03-
98655-205
06588-02-
98655-050
98655-542
98655-544
400 • 98655-973
450 • 98655-974
400 • 05818Z400
450 • 05818Z450
98655-205
98655-594
400 • 98655-978
450 • 98655-979
98655-585
98655-584
98655-193
98655-586

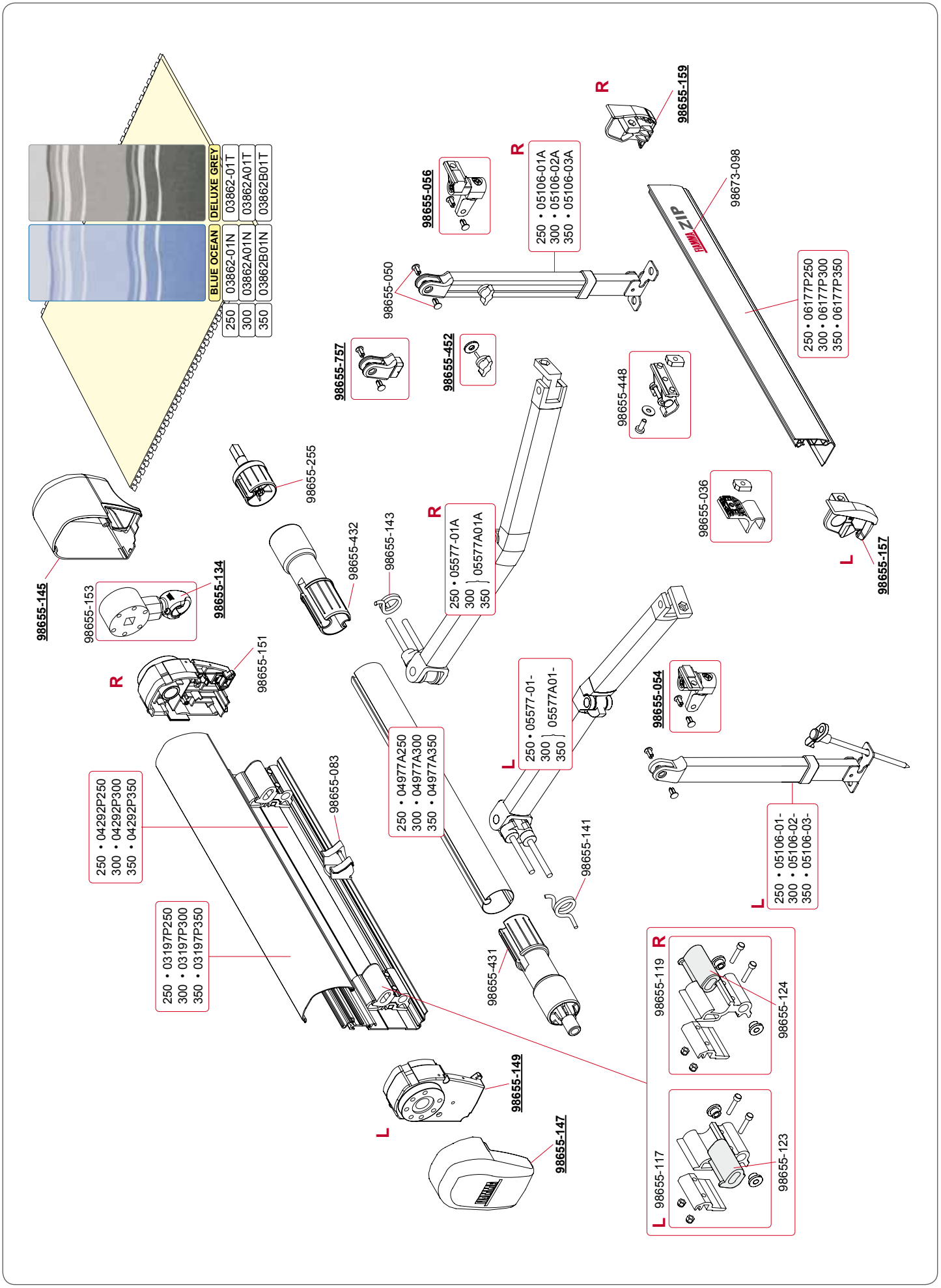
BLUE OCEAN
DELUXE GREY
250 03862-01N 03862-01T
300 03862A01N 03862A01T
350 03862B01N 03862B01T
98655-145
98655-153
98655-134
98655-151
R
98655-255
98655-432
98655-143
R
250 • 05577-01A
300 } 05577A01A
350
98655-757
98655-452
98655-056
R
250 • 05106-01A
300 • 05106-02A
350 • 05106-03A
98655-050
R
98655-159
98673-098
250 • 06177P250
300 • 06177P300
350 • 06177P350
98655-448
98655-036
L
98655-157
250 • 04292P250
300 • 04292P300
350 • 04292P350
250 • 03197P250
300 • 03197P300
350 • 03197P350
98655-083
250 • 04977A250
300 • 04977A300
350 • 04977A350
L
250 • 05577-01-
300 } 05577A01-
350
98655-054
L
250 • 05106-01-
300 • 05106-02-
350 • 05106-03-
98655-141
98655-431
L
98655-149
98655-147
L 98655-117
98655-123
R 98655-119
98655-124

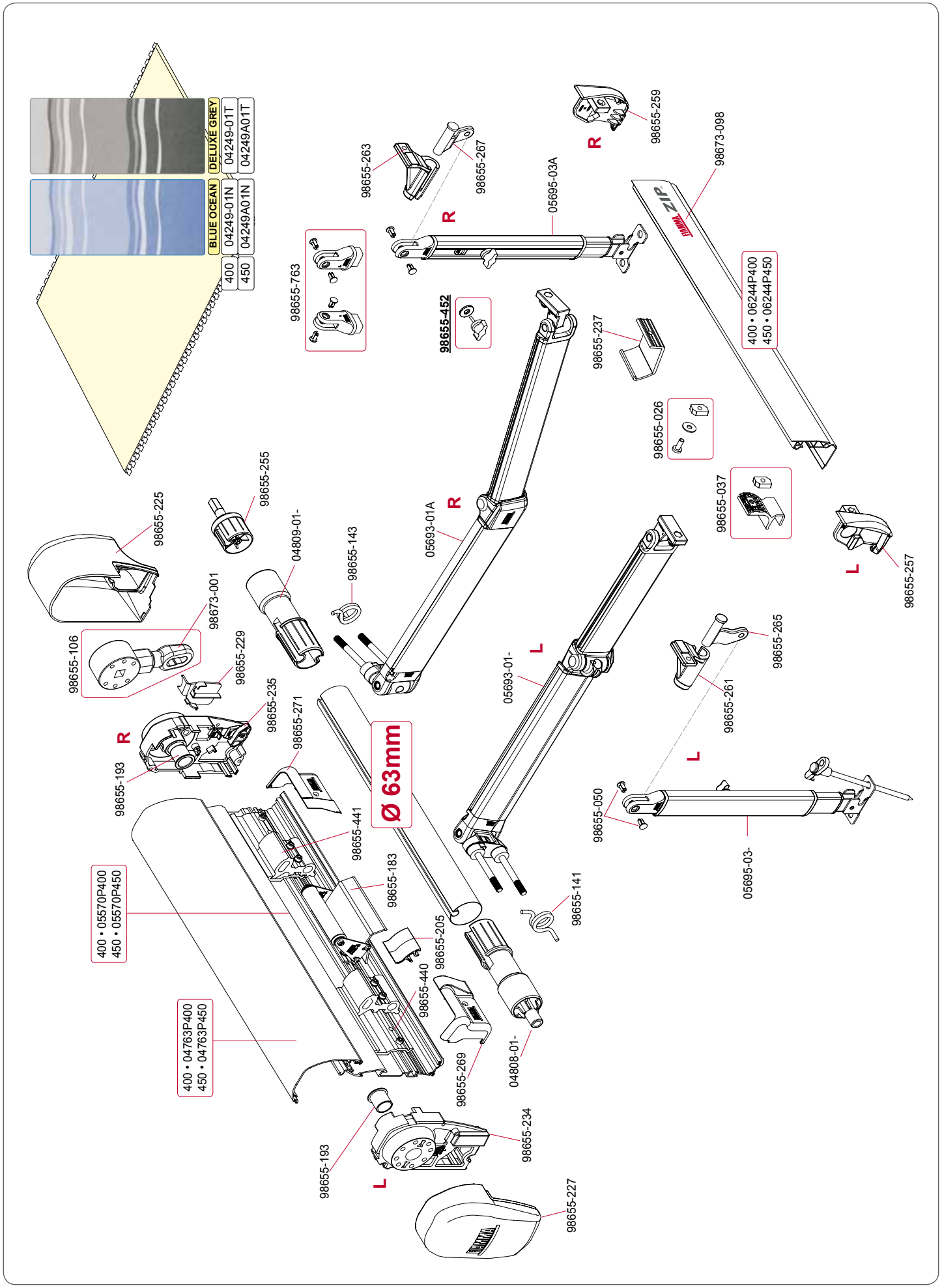
DELUXE GREY
BLUE OCEAN
400
450
04249-01T
04249A01T
04249-01N
04249A01N
98655-263
98655-267
R
05695-03A
98655-259
98673-098
98655-763
98655-452
98655-237
400 • 06244P400
450 • 06244P450
98655-026
98655-037
98655-255
98655-225
04809-01-
98655-143
05693-01A
98655-257
L
98673-001
98655-106
98655-229
05693-01-
98655-265
98655-261
98655-235
98655-271
98655-193
Ø 63mm
98655-441
98655-050
05695-03-
98655-183
98655-141
400 • 05570P400
450 • 05570P450
98655-205
98655-440
400 • 04763P400
450 • 04763P450
98655-269
04808-01-
98655-234
98655-227

CARAVANSTORE ZIP

255 Version 2013 S/N > 9580700 (F701991)

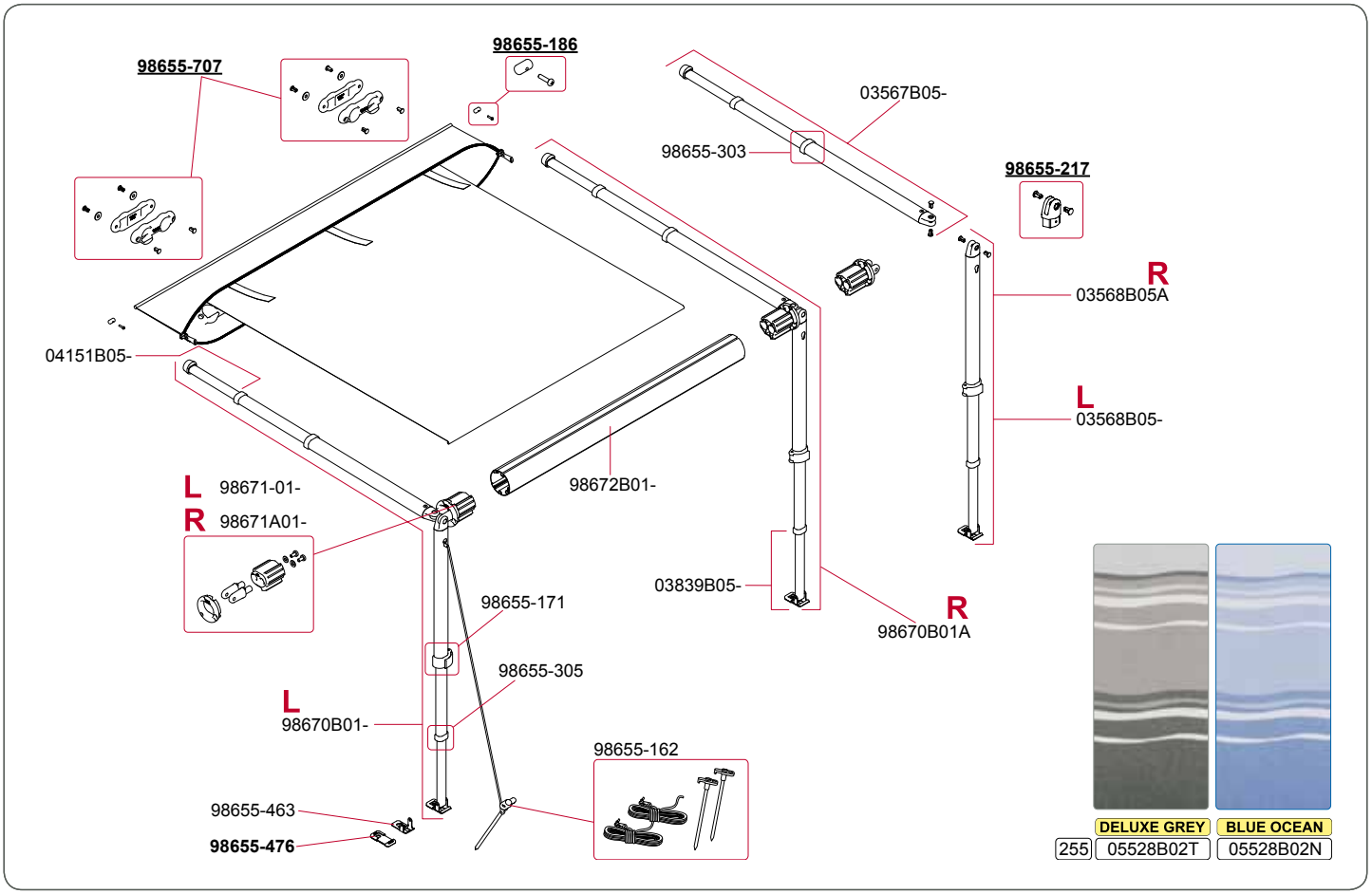

	DELUXE GREY	BLUE OCEAN
255	05528B02T	05528B02N

CARAVANSTORE ZIP

280-400 Version 2013 S/N > 9580700 (F701991)

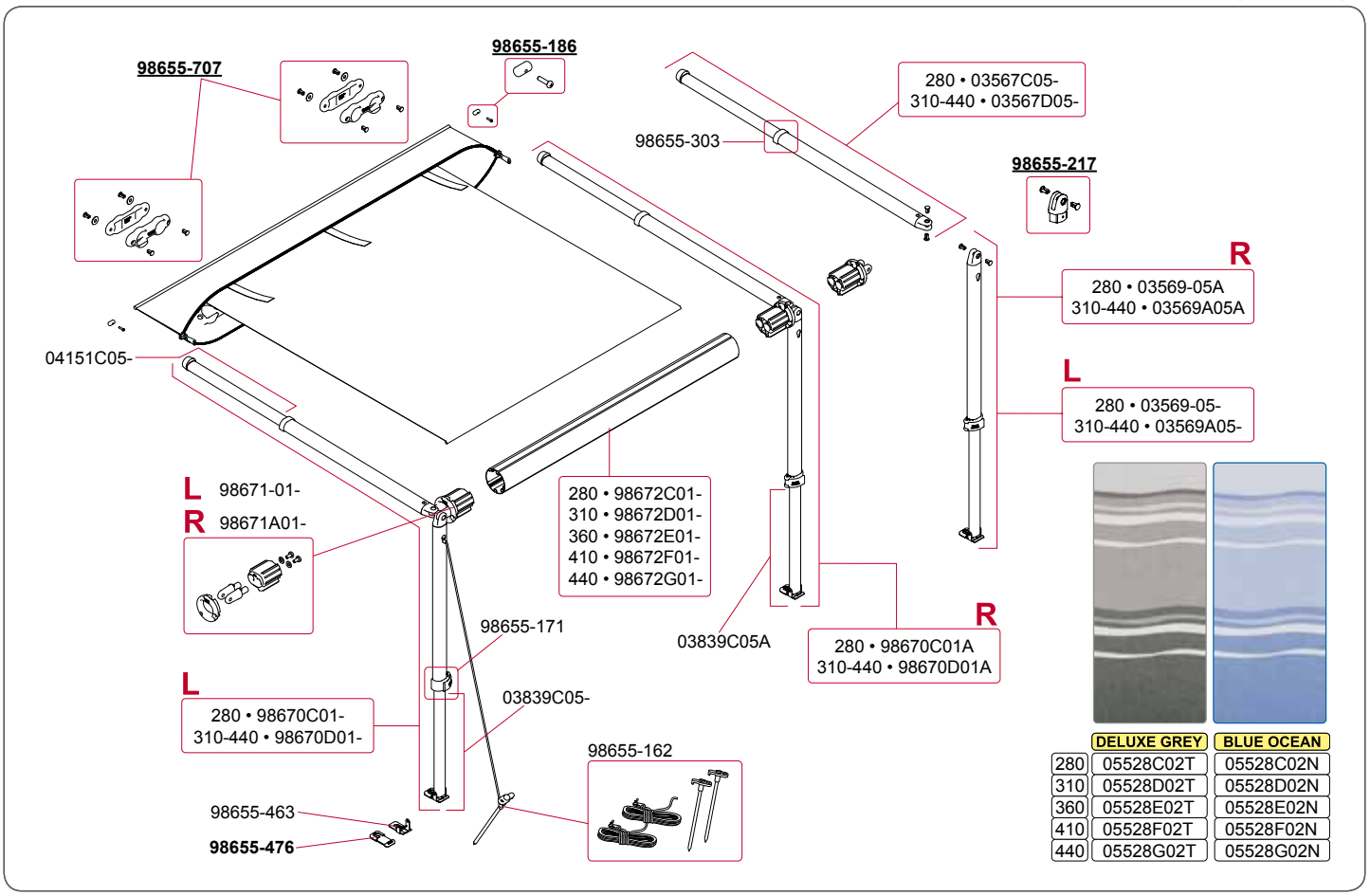

	DELUXE GREY	BLUE OCEAN
280	05528C02T	05528C02N
310	05528D02T	05528D02N
360	05528E02T	05528E02N
410	05528F02T	05528F02N
440	05528G02T	05528G02N

CARAVANSTORE ZIP

255 Version 2007 S/N > 9450000 (F700045)

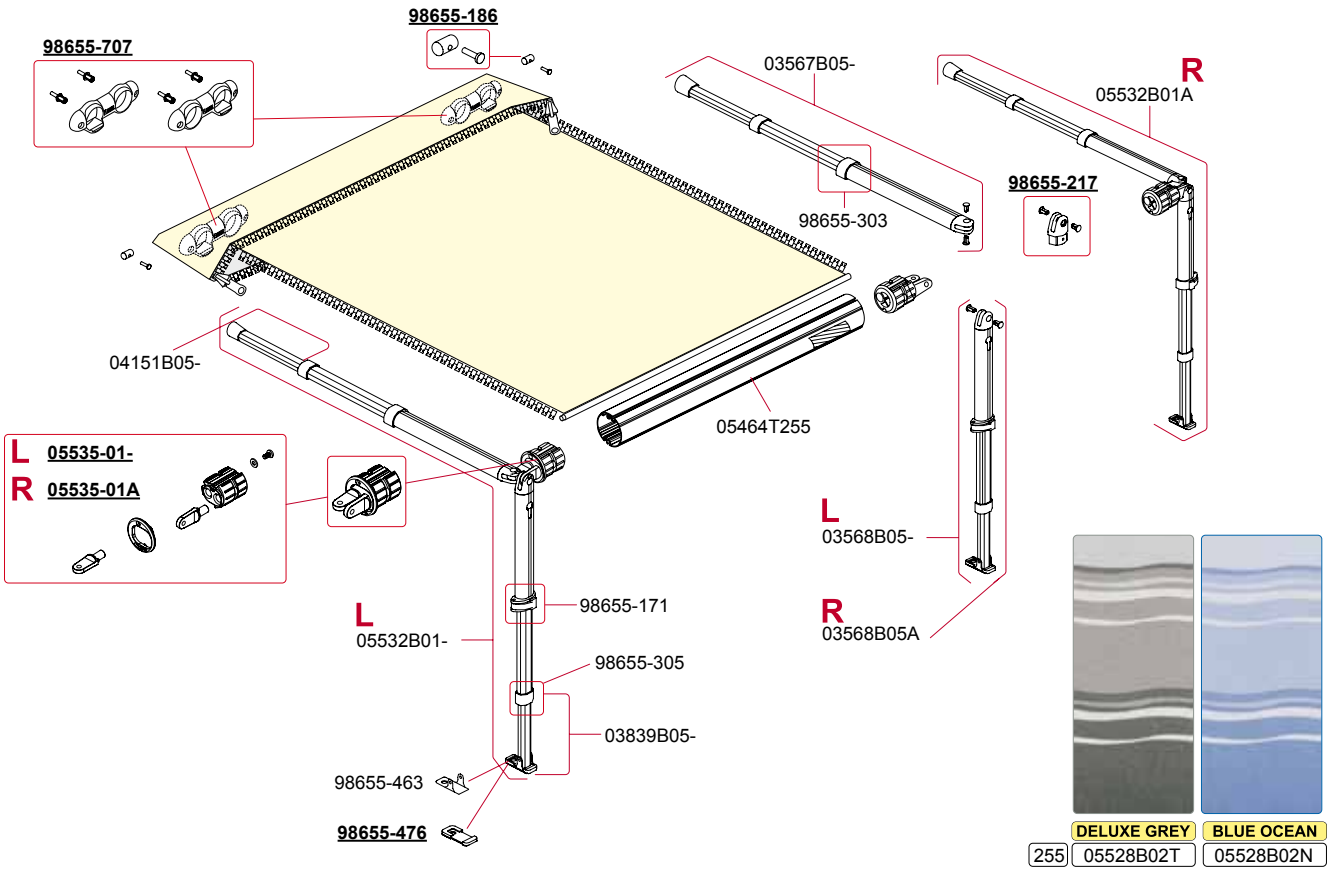

	DELUXE GREY	BLUE OCEAN
255	05528B02T	05528B02N

CARAVANSTORE ZIP

280-400 Version 2007 S/N > 9450000 (F700045)

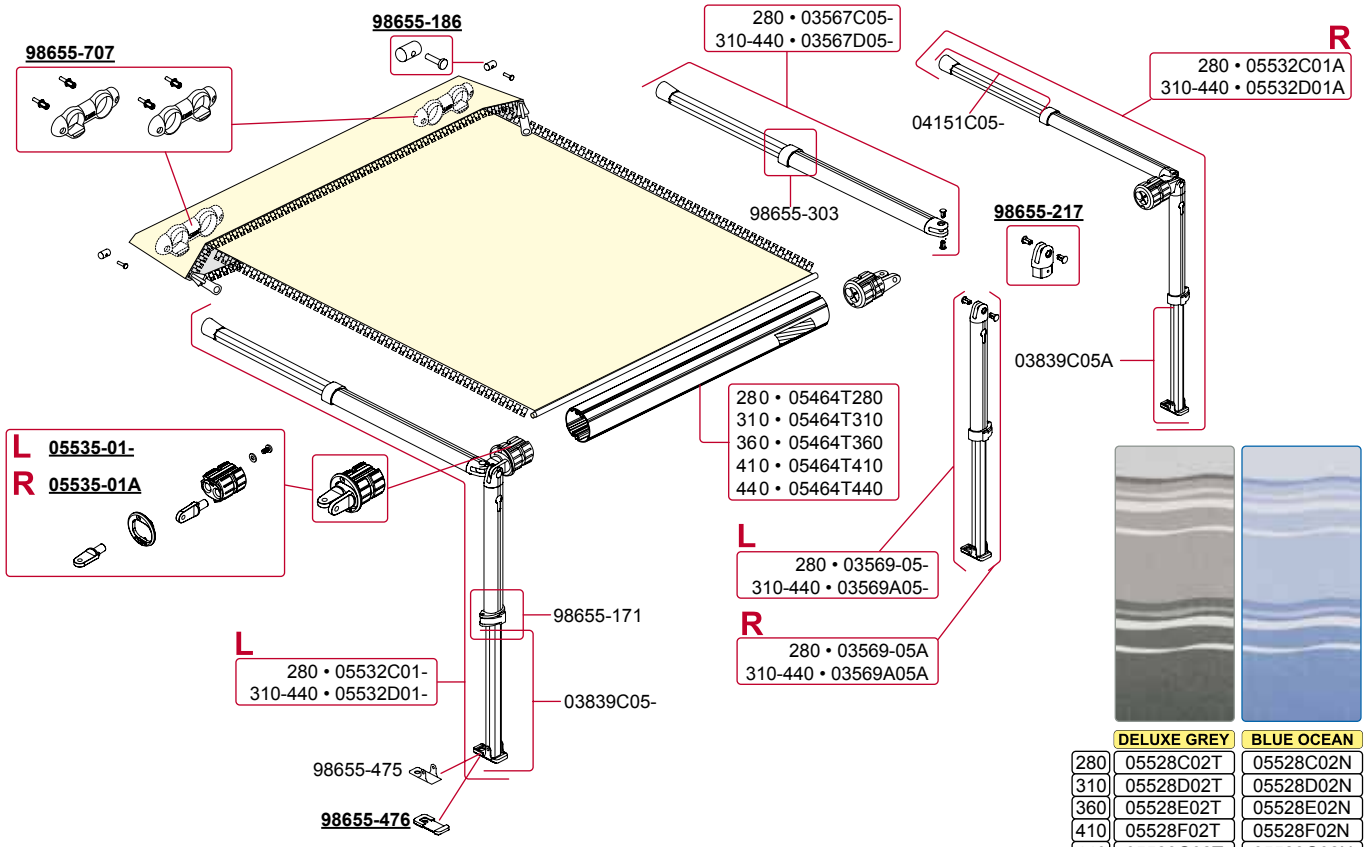

	DELUXE GREY	BLUE OCEAN
280	05528C02T	05528C02N
310	05528D02T	05528D02N
360	05528E02T	05528E02N
410	05528F02T	05528F02N
440	05528G02T	05528G02N

CARAVANSTORE ZIP

255 Version 2005

98655-186

98655-707

03567B05-

R 05220B01A

98655-303

98655-217

04151B05-

L 05263-01-

R 05263-01A

03568B05- L R 03568B05A

98655-171

L 05220B01-

98655-305

98655-463

03839B05-

98655-476

DELUXE GREY	BLUE OCEAN
05528B02T	05528B02N

CARAVANSTORE ZIP

280-400 Version 2005

98655-186

98655-707

280 • 03567C05-
310-440 • 03567D05-

R
280 • 05220C01A
310-440 • 05220D01A

98655-303

98655-217

04151C05-

L 05263-01-

R 05263-01A

L
280 • 03569-05-
310-440 • 03569A05-

98655-171

L
280 • 05220C01-
310-440 • 05220D01-

R
280 • 03569-05A
310-440 • 03569A05A

03839C05-

98655-475

98655-476

	DELUXE GREY	BLUE OCEAN
280	05528C02T	05528C02N
310	05528D02T	05528D02N
360	05528E02T	05528E02N
410	05528F02T	05528F02N
440	05528G02T	05528G02N

For awning spare-parts see page 32-33

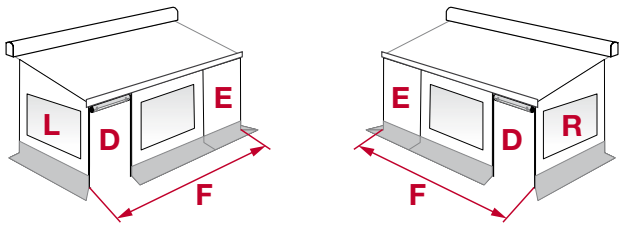

Panels

FIAMMA ZIP CODE	DESCRIPTION	FRONT PANEL (F)	FRONT PANEL (E) 50 cm	FRONT PANEL (E) 100 cm	FRONT PANEL (E) 150 cm	SIDE PANEL RIGHT (R)	SIDE PANEL LEFT (L)	DOOR (D)
05934-01-	Fiamma ZIP 250 Van H180-220	98655-796				98655-812	98655-811	98655-802
05934-02-	Fiamma ZIP 300 Van H180-220	98655-797				98655-815	98655-814	
05934-03-	Fiamma ZIP 300 Medium H225-250	98655-789	06138-01-	06138A01-	06138C01-	98655-817	98655-816	98655-795
05934-04-	Fiamma ZIP 350 Medium H225-250	98655-790						
05934-05-	Fiamma ZIP 400 Medium H225-250	98655-791						
05934-06-	Fiamma ZIP 450 Medium H225-250	98655-803						
05934-07-	Fiamma ZIP 300 Large H251-280	98655-789	06138-01-	06138A01-	06138C01-	98655-819	98655-818	98655-795
05934-08-	Fiamma ZIP 350 Large H251-280	98655-790						
05934-09-	Fiamma ZIP 400 Large H251-280	98655-791						
05934-10-	Fiamma ZIP 450 Large H251-280	98655-803						

Structure (Rapid Set)

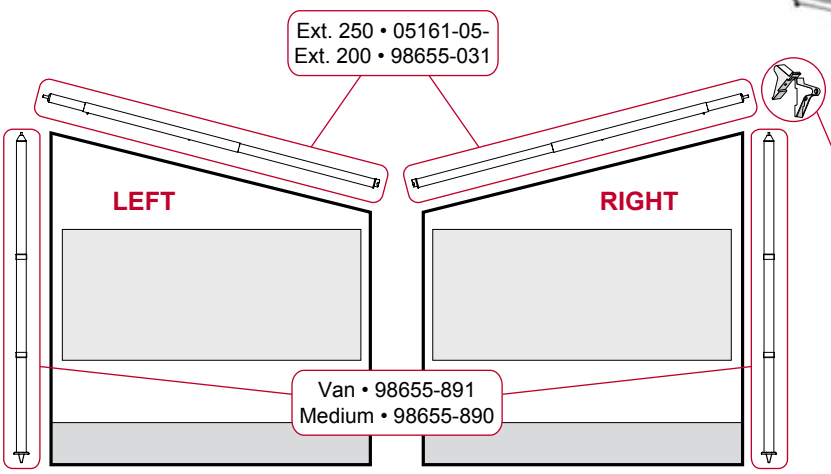

KIT RAPID SET F45
Ext. 250 cm
98655-861

standard for F45
98655-897

for F45 L
F45 Ti L
98655-898

Components

CURTAINS KIT OCEAN
98655A482
(2 pcs.)

PEG KIT
98655-349
(20 pcs.)

KIT LADDERBAND
98655-346
(10 pcs.)

KIT SIDE RUBBER
98655-631
(4 pcs.)

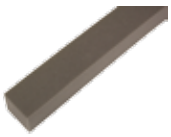

KIT RUBBER RING
98655-347
(10 pcs.)

KIT METALLIC HOOK
98655-006
(20 pcs.)

SIDE ZIPPER
98655-943

TOP ZIPPER
FIAMMA ZIP
98655-942

CARAVANSTORE ZIP® (Enclosure)

For awning spare-parts see page 34-35

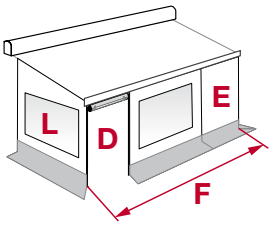

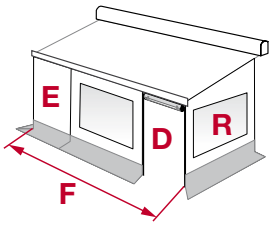

Panels

CARAVANSTORE ZIP CODE	DESCRIPTION	FRONT PANEL (F)	FRONT PANEL (E) 50 cm	FRONT PANEL (E) 100 cm	FRONT PANEL (E) 140 cm	SIDE PANEL RIGHT (R)	SIDE PANEL LEFT (L)	DOOR (D)
05260-10-	Caravanstore ZIP 255	98655-787	06138-01-	06138A01-	06138B01-	98655-794	98655-793	98655-795
05260-11-	Caravanstore ZIP 280	98655-788						
05260-12-	Caravanstore ZIP 310	98655-789						
05260-13-	Caravanstore ZIP 360	98655-790						
05260-14-	Caravanstore ZIP 410	98655-791						
05260-15-	Caravanstore ZIP 440	98655-792						

Structure (Rapid Set)

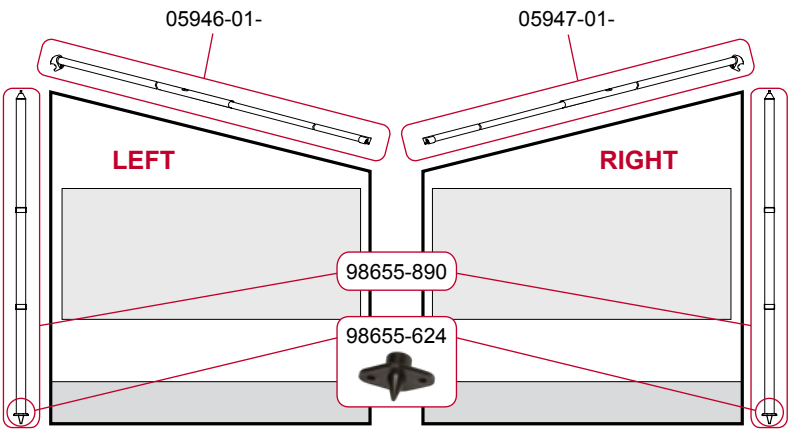

KIT RAPID SET
CARAVANSTORE ZIP
98655-922

Components

CURTAINS KIT OCEAN
98655A482
(2 pcs.)

PEG KIT
98655-349
(20 pcs.)

KIT LADDERBAND
98655-346
(10 pcs.)

KIT SIDE RUBBER
98655-631
(4 pcs.)

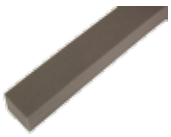

KIT RUBBER RING
98655-347
(10 pcs.)

KIT METALLIC HOOK
98655-006
(20 pcs.)

SIDE ZIPPER
98655-943

TOP ZIPPER
CS ZIP
98655-941

PRIVACY® ROOM F45

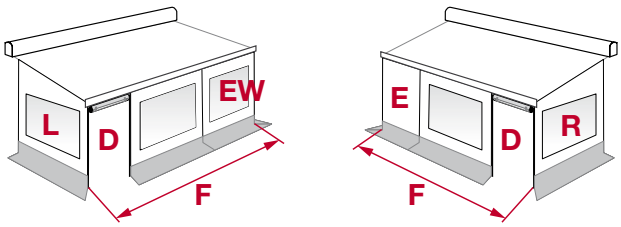

Panels

PRIVACY ROOM CODE	DESCRIPTION	FRONT PANEL (F)	FRONT PANEL (E) 50 cm	FRONT PANEL (E) 100 cm	FRONT PANEL (E) 150 cm	FRONT PANEL (EW) 200 cm	SIDE PANEL RIGHT (R)	SIDE PANEL LEFT (L)	DOOR (D)
05920-02-	Privacy Room 250 Van H180-220	98655-796					98655-800	98655-798	98655-802
05920-03-	Privacy Room 300 Van H180-220	98655-797					98655-801	98655-799	
05920-04-	Privacy Room 300 Medium H225-250	98655-789	06138-01-	06138A01-	06138C01-		98655-805	98655-804	98655-795
05920-05-	Privacy Room 350 Medium H225-250	98655-790							
05920-06-	Privacy Room 400 Medium H225-250	98655-791							
05920-07-	Privacy Room 450 Medium H225-250	98655-803							
05920-08-	Privacy Room 300 Large H251-280	98655-789	06138-01-	06138A01-	06138C01-		98655-807	98655-806	98655-795
05920-09-	Privacy Room 350 Large H251-280	98655-790							
05920-10-	Privacy Room 400 Large H251-280	98655-791							
05920-11-	Privacy Room 450 Large H251-280	98655-803							
05920-12-	Privacy Room 500 Large H251-280	98655-808				98655-945			
05920-13-	Privacy Room 550 Large H251-280	98655-809				98655-945			
05920-14-	Privacy Room 400 XL H281-330	98655-823					98655-829	98655-828	98655-830
05920-15-	Privacy Room 450 XL H281-330	98655-824							
05920-16-	Privacy Room 500 XL H281-330	98655-825							
05920-17-	Privacy Room 550 XL H281-330	98655-826							
05920-18-	Privacy Room 260 Ti VW T5 H180-220	98655-822					98655-800	98655-798	98655-802

Structure (Fast Clip)

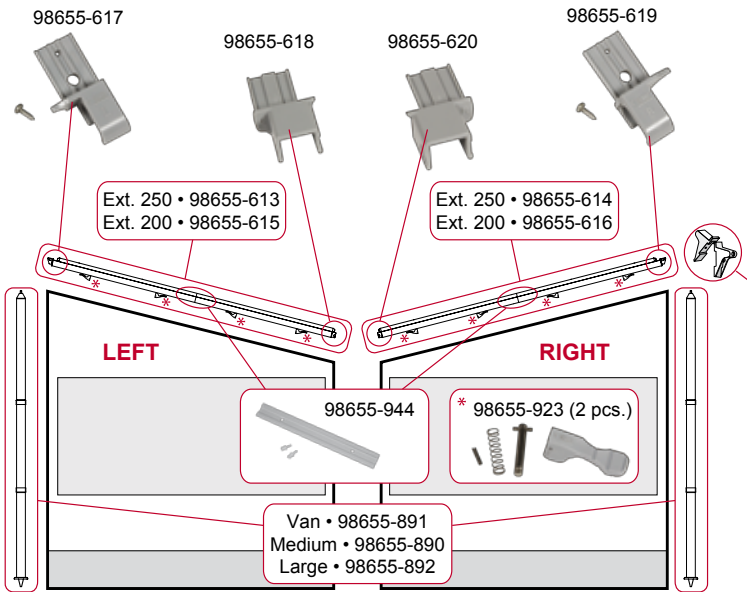

KIT FAST CLIP Ext. 250 cm
98655-610

KIT FAST CLIP Ext. 200 cm
98655-611

Components

CURTAINS KIT OCEAN
98655A482
(2 pcs.)

PEG KIT
98655-349
(20 pcs.)

KIT LADDERBAND
98655-346
(10 pcs.)

KIT RUBBER RING
98655-347
(10 pcs.)

KIT METALLIC HOOK
98655-006
(20 pcs.)

SIDE ZIPPER
98655-943

KIT SIDE RUBBER
98655-631
(4 pcs.)

PRIVACY® ROOM F65

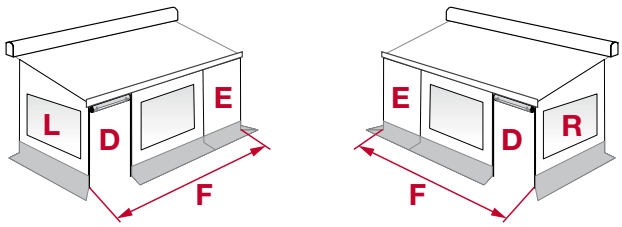

Panels

PRIVACY ROOM CODE	DESCRIPTION	FRONT PANEL (F)	FRONT PANEL (E)	SIDE PANEL RIGHT (R)	SIDE PANEL LEFT (L)	DOOR (D)
05925-01-	Privacy Room 290 F65 Ducato <06/06	98655-831	See produt catalogue	98655-837	98655-836	98655-846
05925-02-	Privacy Room 320 F65 Ducato >06/06	98655-832		98655-840	98655-839	
05925-03-	Privacy Room 340 F65 Ducato <06/06	98655-833				
05925-04-	Privacy Room 370 F65 Ducato >06/06	98655-834				
05925-05-	Privacy Room 400 F65/S Ducato >06-06	98655-876				
05925-06-	Privacy Room 400 F65 Ducato Kreos 3005	98655-835		98655-842	98655-841	98655-838
06016-01-	Privacy Room 320 F65 Sprinter	98655-832		98655-844	98655-843	98655-845
06016A01-	Privacy Room 340 F65 Sprinter	98655-833				
06016B01-	Privacy Room 370 F65 Sprinter	98655-834				
06016C01-	Privacy Room 400 F65 Sprinter	98655-876				

Structure (Fast Clip)

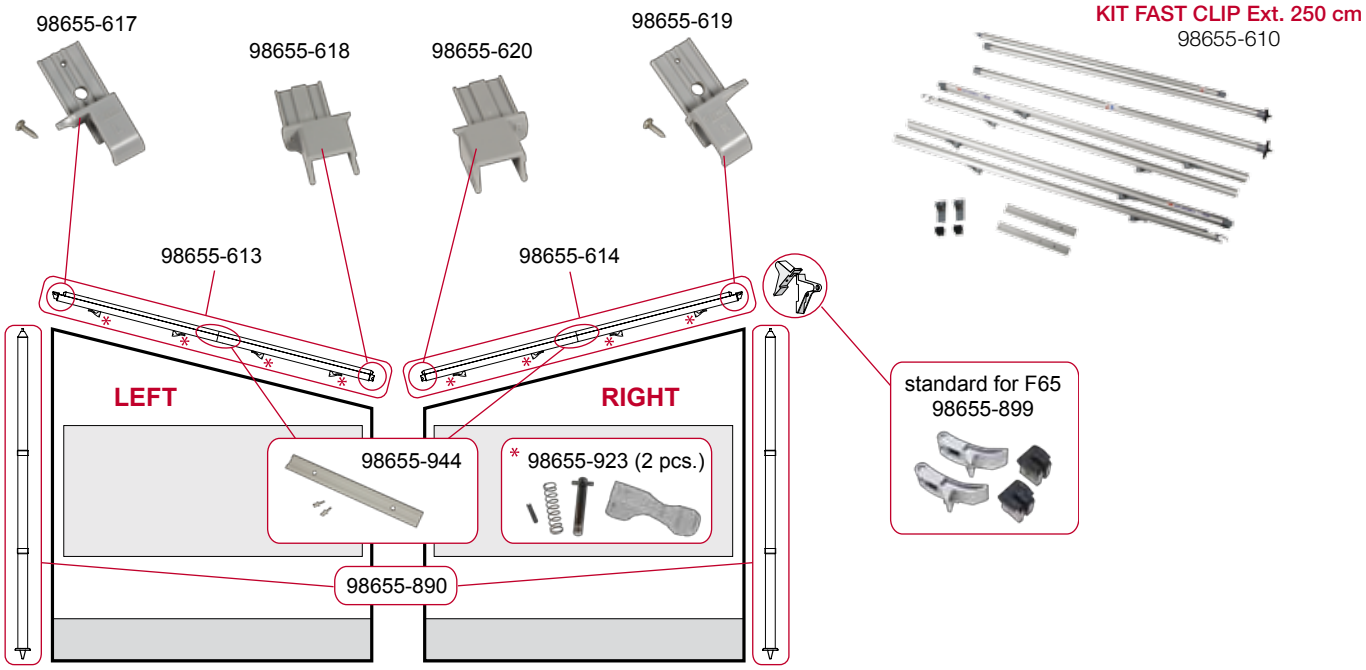

Components

PEG KIT
98655-349
(20 pcs.)

KIT LADDERBAND
98655-346
(10 pcs.)

CURTAINS KIT OCEAN
98655A482
(2 pcs.)

KIT RUBBER RING
98655-347
(10 pcs.)

KIT METALLIC HOOK
98655-006
(20 pcs.)

SIDE ZIPPER
98655-943

KIT SIDE RUBBER
98655-631
(4 pcs.)

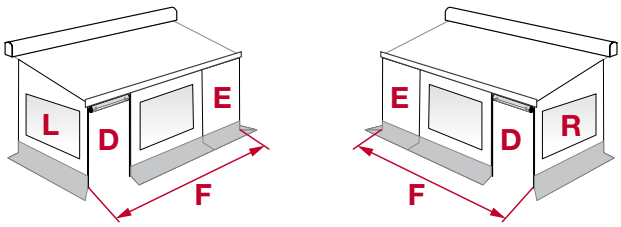

Panels

PRIVACY ROOM LIGHT CODE	DESCRIPTION	FRONT PANEL (F)	FRONT PANEL (E) 50 cm	FRONT PANEL (E) 100 cm	FRONT PANEL (E) 150 cm	SIDE PANEL RIGHT (R)	SIDE PANEL LEFT (L)	DOOR (D)
06097A01-	Privacy Room Light 300 Medium H.225/250	98655-781	06683-01-	06683A01-	06683C01-	98655-868	98655-867	98655-778
06097A02-	Privacy Room Light 350 Medium H.225/250	98655-782						
06097A03-	Privacy Room Light 400 Medium H.225/250	98655-783						
06097A04-	Privacy Room Light 450 Medium H.225/250	98655-871						
06097B01-	Privacy Room Light 300 Large H.251/280	98655-781	06683-01-	06683A01-	06683C01-	98655-870	98655-869	98655-778
06097B02-	Privacy Room Light 350 Large H.251/280	98655-782						
06097B03-	Privacy Room Light 400 Large H.251/280	98655-783						
06097B04-	Privacy Room Light 450 Large H.251/280	98655-871						

Structure (Fast Clip)

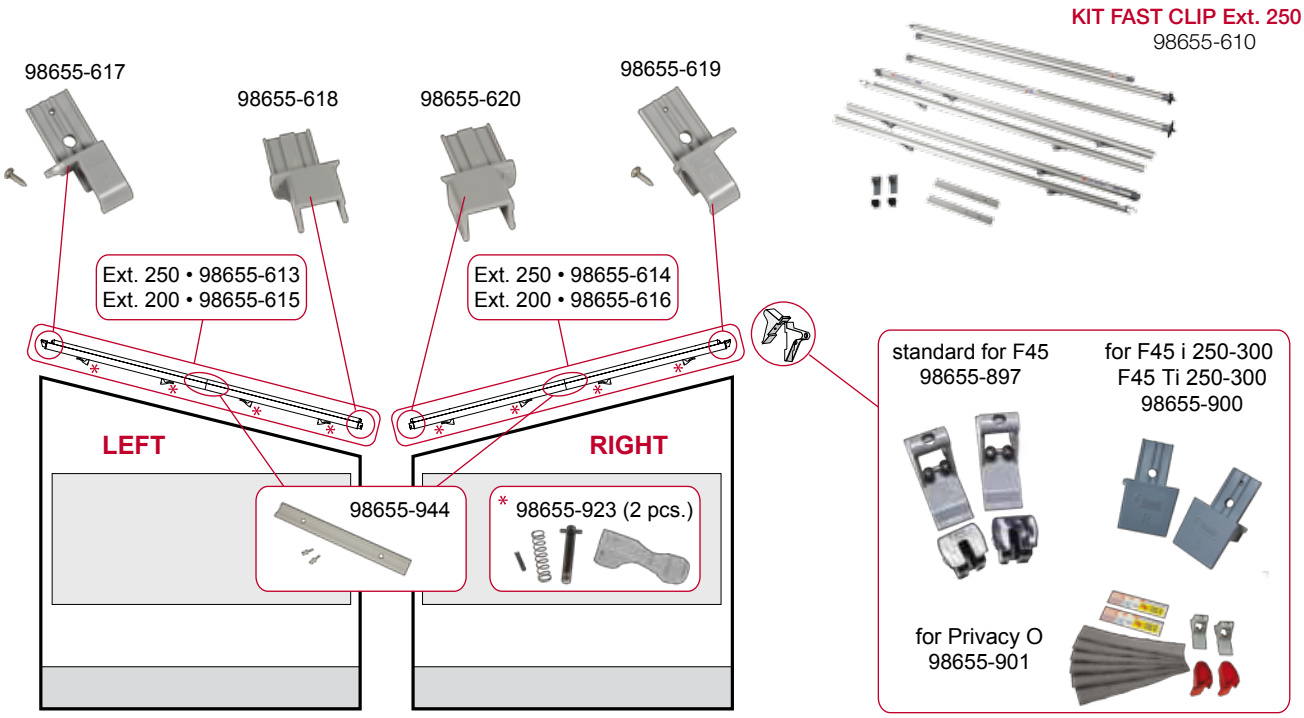

Components

CURTAINS KIT OCEAN
98655A482
(2 pcs.)

PEG KIT
98655-349
(20 pcs.)

KIT LADDERBAND
98655-346
(10 pcs.)

KIT RUBBER RING
98655-347
(10 pcs.)

KIT ANCHOR PLATE NYLON
98655-348
(10 pcs.)

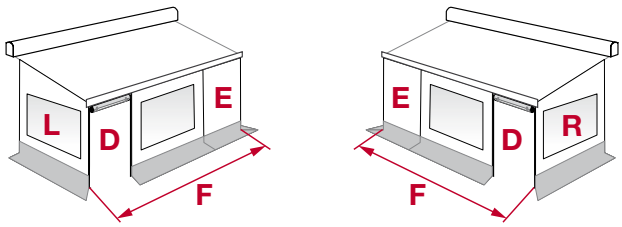

Panels

PRIVACY ROOM CS LIGHT CODE	DESCRIPTION	FRONT PANEL (F)	FRONT PANEL (E) 50 cm	FRONT PANEL (E) 100 cm	FRONT PANEL (E) 140 cm	SIDE PANEL RIGHT (R)	SIDE PANEL LEFT (L)	DOOR (D)
05815-01-	Privacy Room CS LIGHT 255	98655-779	06683-01-	06683A01-	06683B01-	98655-786	98655-785	98655-778
05815-02-	Privacy Room CS LIGHT 280	98655-780						
05815-03-	Privacy Room CS LIGHT 310	98655-781						
05815-04-	Privacy Room CS LIGHT 360	98655-782						
05815-05-	Privacy Room CS LIGHT 410	98655-783						
05815-06-	Privacy Room CS LIGHT 440	98655-784						

Structure (Fast Clip CS)

KIT FAST CLIP CS
98655-621

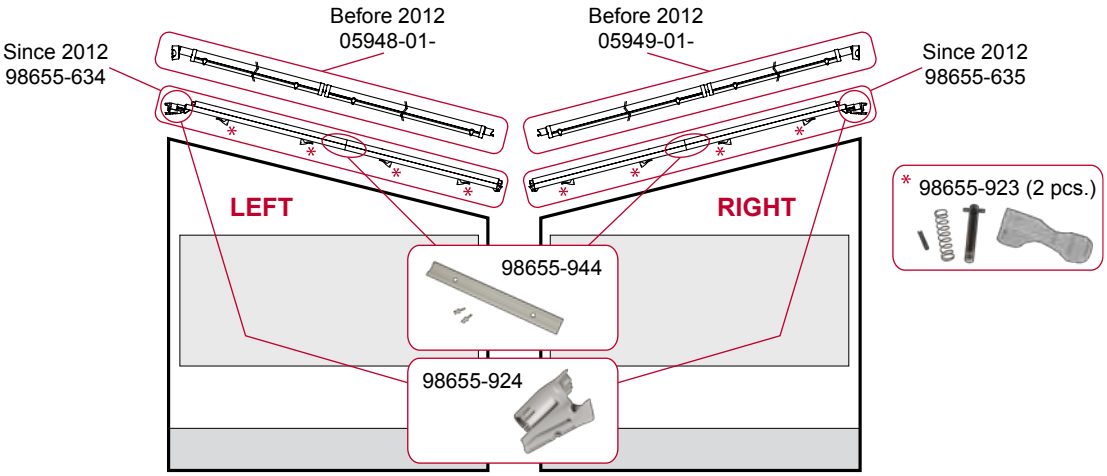

Components

CURTAINS KIT OCEAN
98655A482
(2 pcs.)

PEG KIT
98655-349
(20 pcs.)

KIT LADDERBAND
98655-346
(10 pcs.)

KIT RUBBER RING
98655-347
(10 pcs.)

KIT ANCHOR PLATE NYLON
98655-348
(10 pcs.)

CLIP SYSTEM

KIT ADAPTERS for CLIP SYSTEM

98655-499
(left - to lead bar)

98655-501
(right - to lead bar)

98655-497
(left - to case box)

98655-498
(right - to case box)

SIDE W - SIDE W PRO - SUN VIEW SIDE

KIT RAFTER SIDE F45 / F65
98655-866

KIT RAFTER SIDE CARAVANSTORE / F35 PRO
03888-01-

PEG KIT
98655-349
(20 pcs.)

KIT ANCHOR PLATE NYLON
98655-348
(10 pcs.)

KIT LADDERBAND
98655-346
(10 pcs.)

KIT RUBBER RING
98655-347
(10 pcs.)

KIT HOOK PRIVACY PRO 2000
98655-344
(10 pcs.)

INSTALLATION KIT FOR PRIVACY POLES ON AWNING LEAD BAR
98655-065

SKIRTING MOTORHOME

KIT PRESSURE BUTTON for SKIRTING MOTORHOME
98655-664
(15 pcs. each)

FIAMMASTORE ACCESSORIES

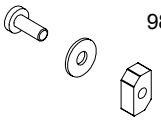

98655-026

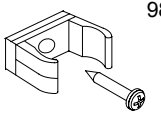

98655-094

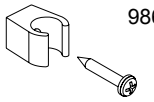

98655-095

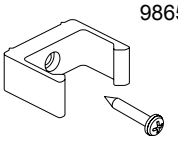

98655-097

Plastic (2 pcs.)
98655-176

Aluminium (2 pcs.)
98655-728

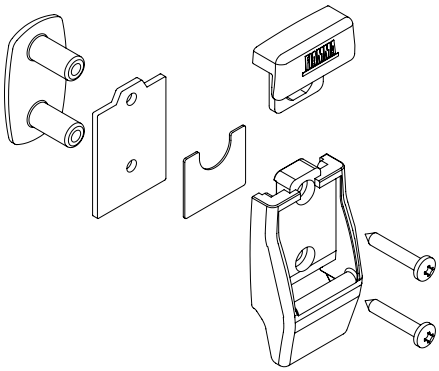

98655-687

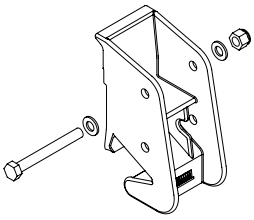

98655-027

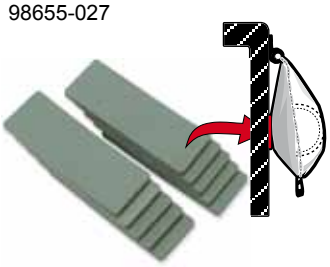

NOTE

CARRY-BIKE® PRO

02093-17-

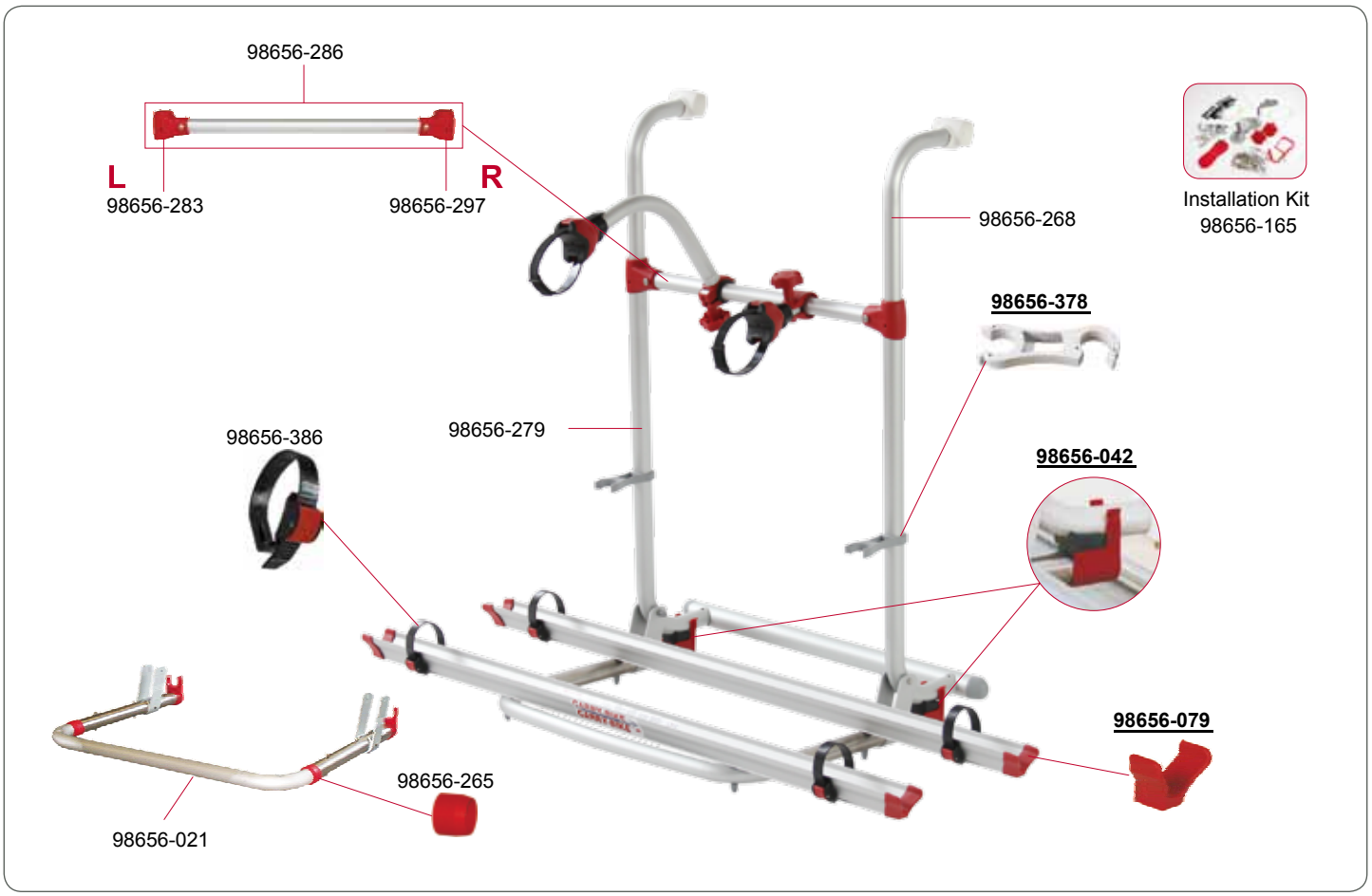

CARRY-BIKE® PRO HYMER - DETHLEFFS

02093A64- Version 2008

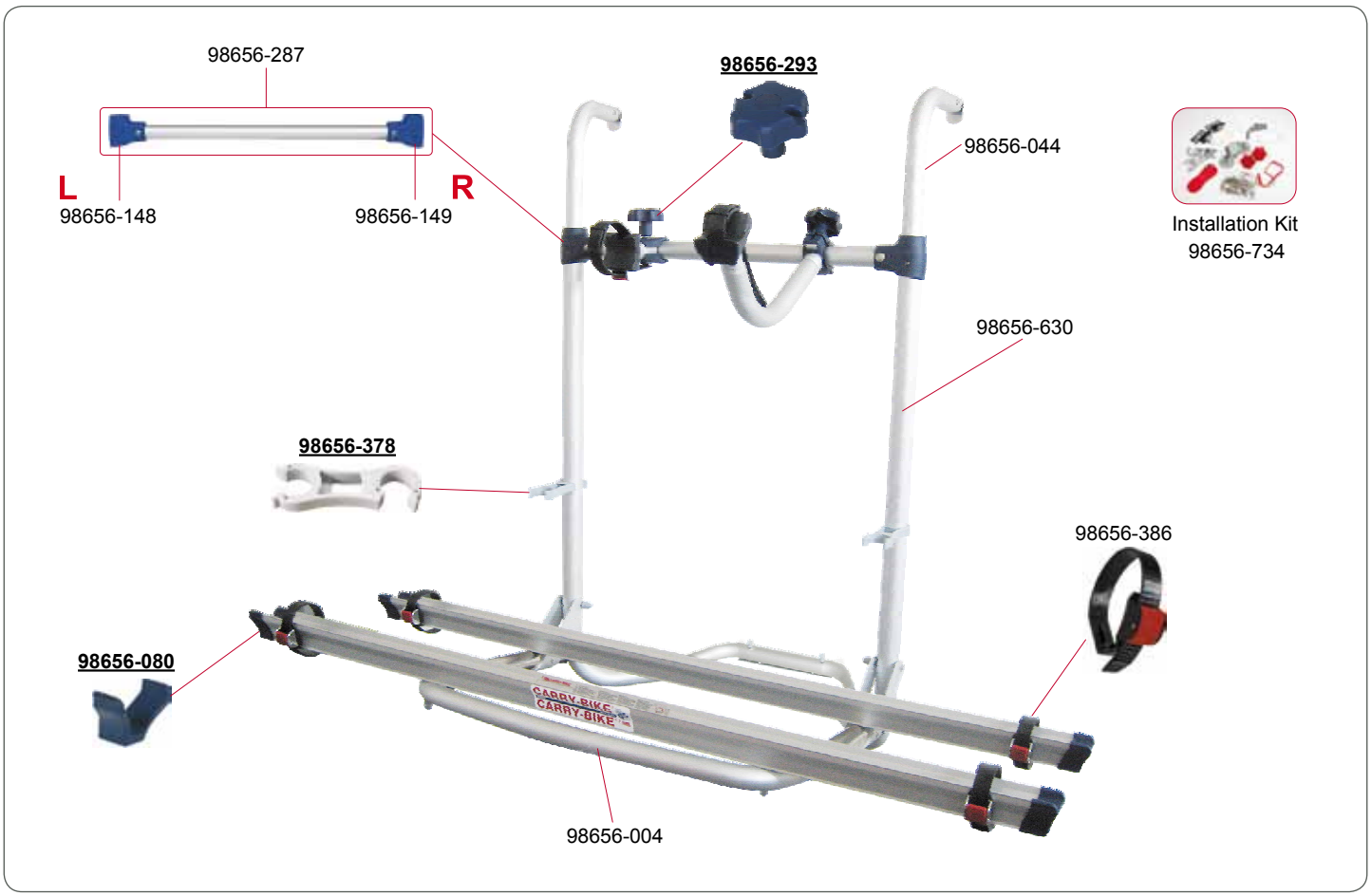

CARRY-BIKE® PRO AUTOTRAIL

02093-98-

CARRY-BIKE® HYMER

02093-64-

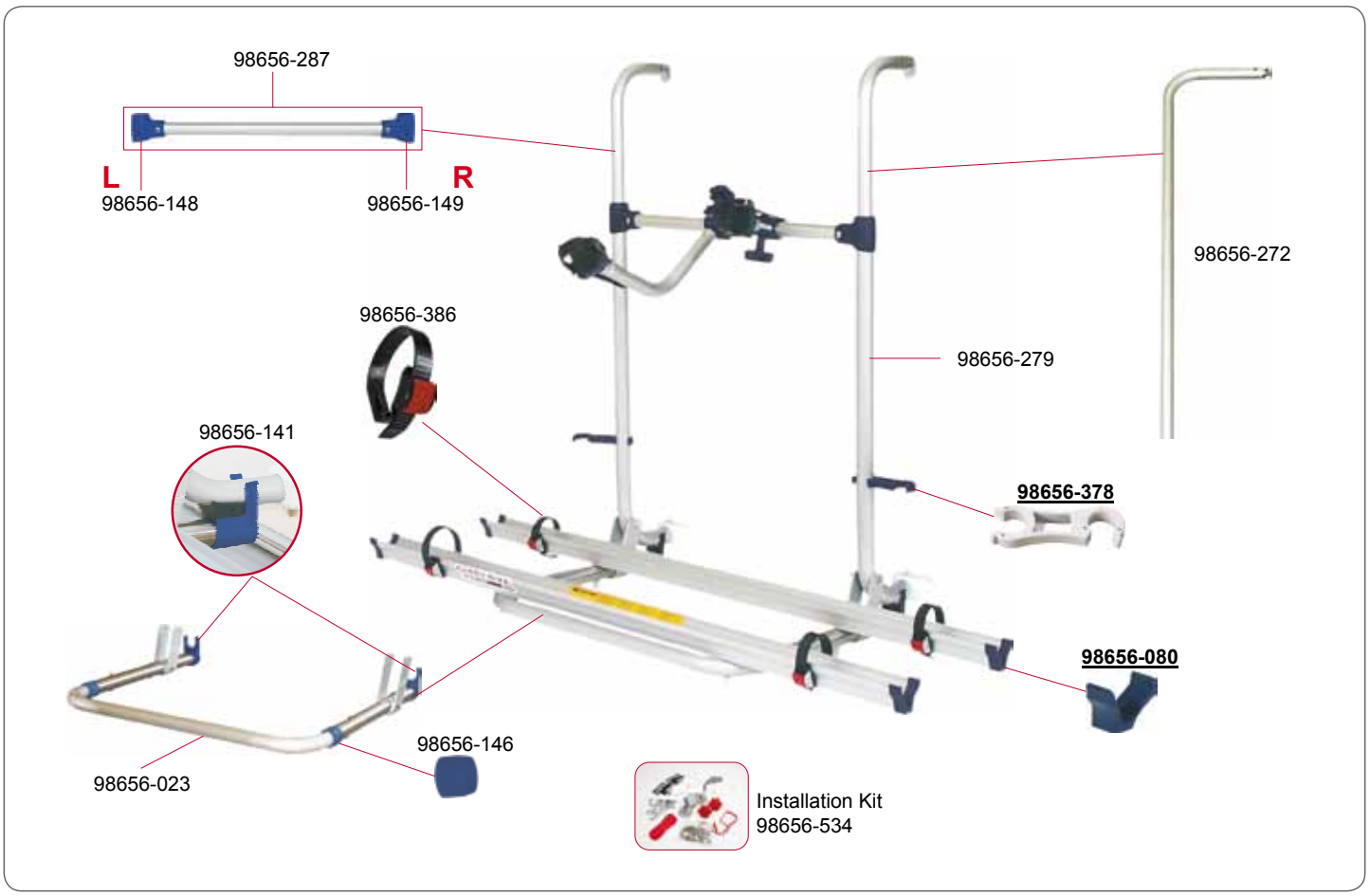

CARRY-BIKE® PRO C

02093-18-

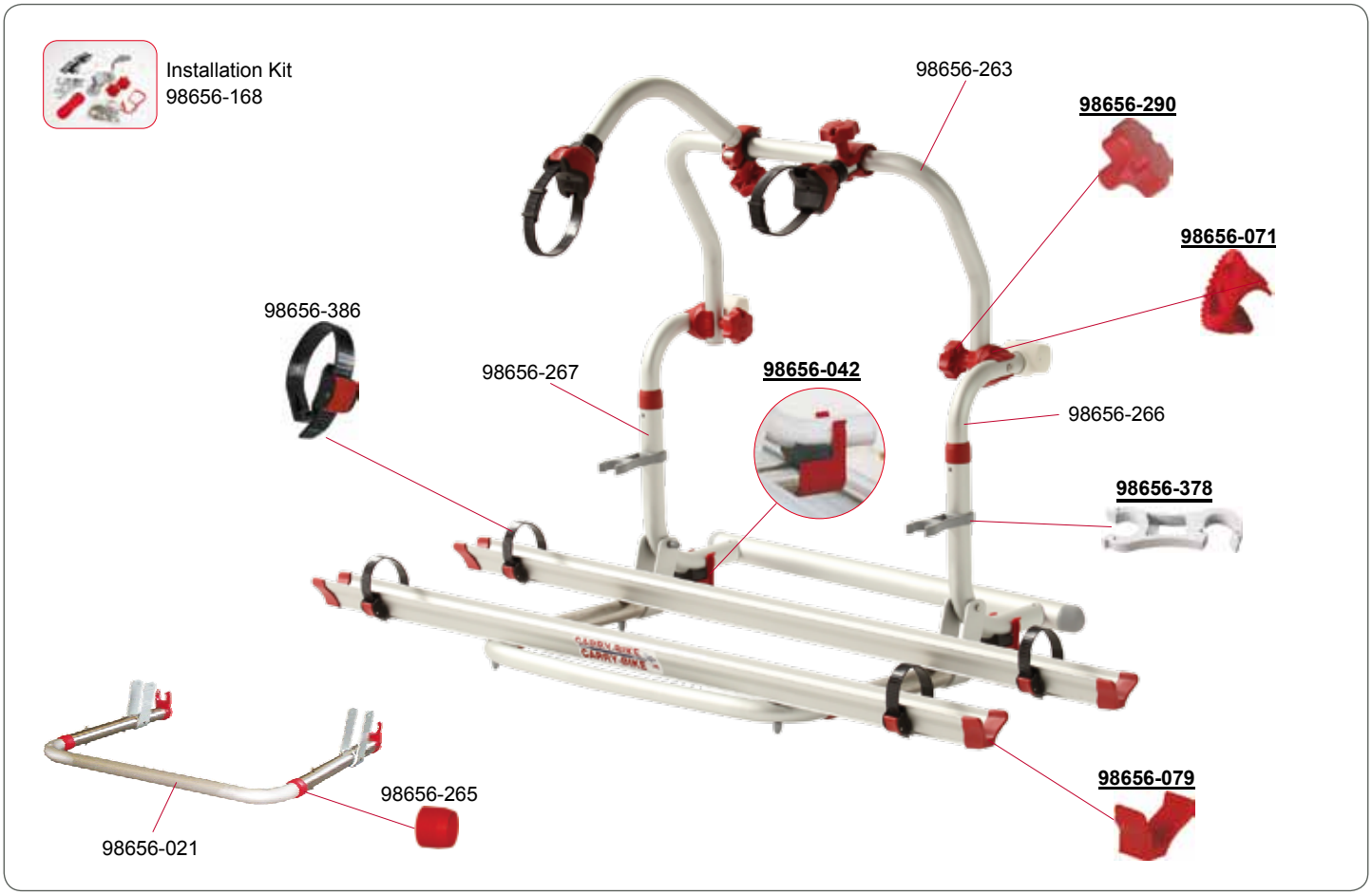

CARRY-BIKE® PRO C KNAUS-EIFFELAND

02093-29-

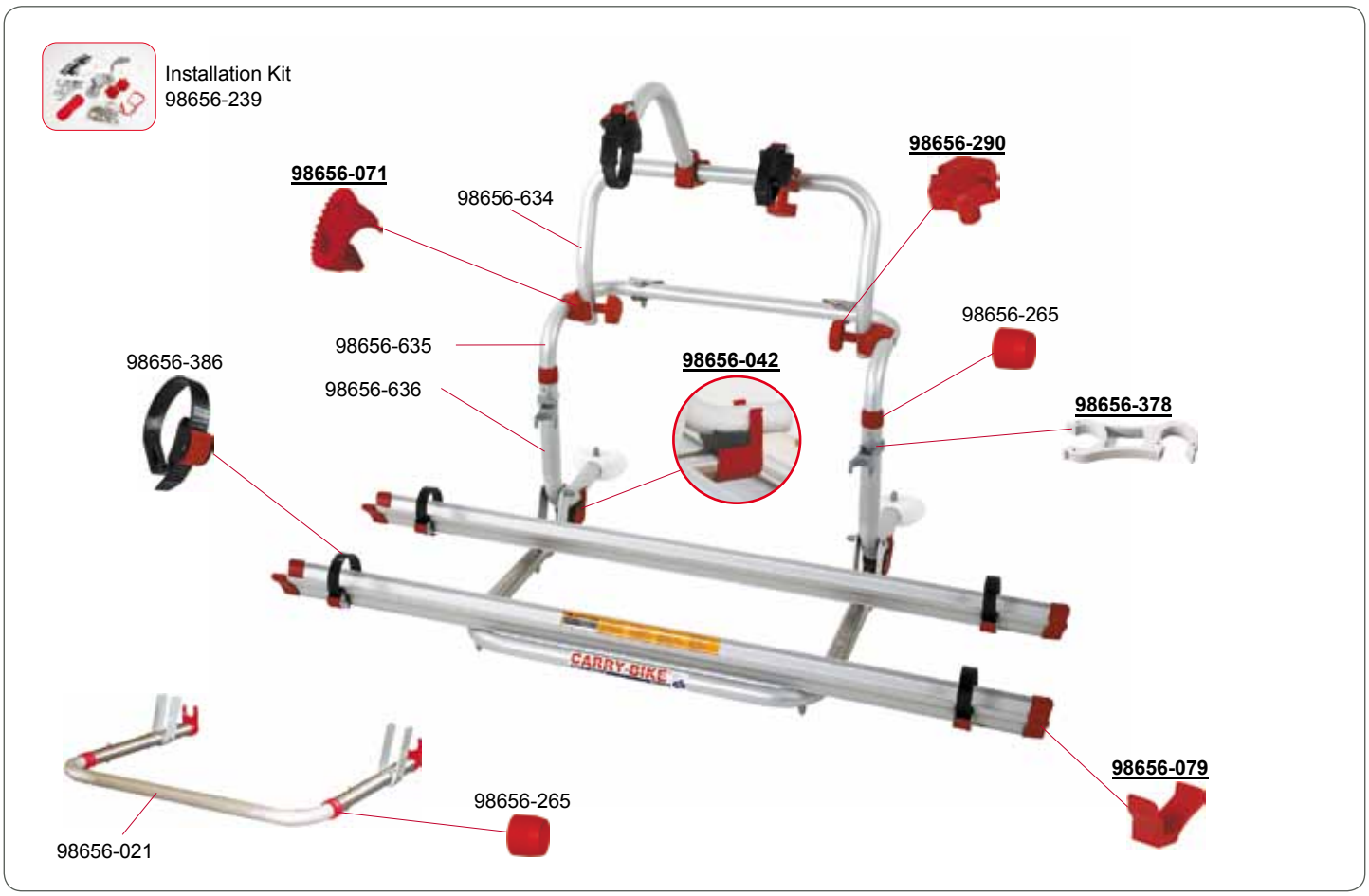

CARRY-BIKE® L80

02093-59-

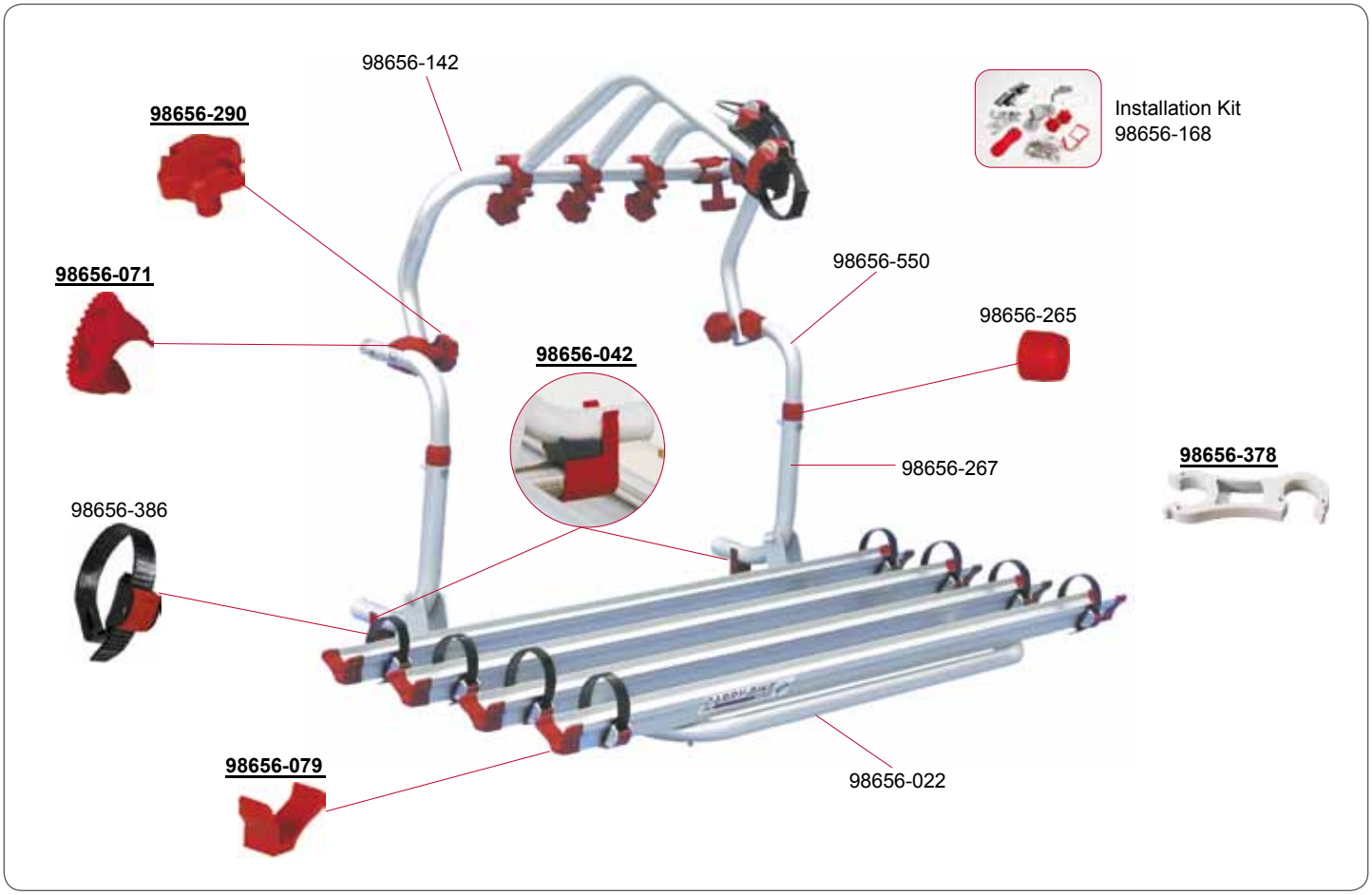

CARRY-BIKE® EM - EURA MOBIL

02093-56B

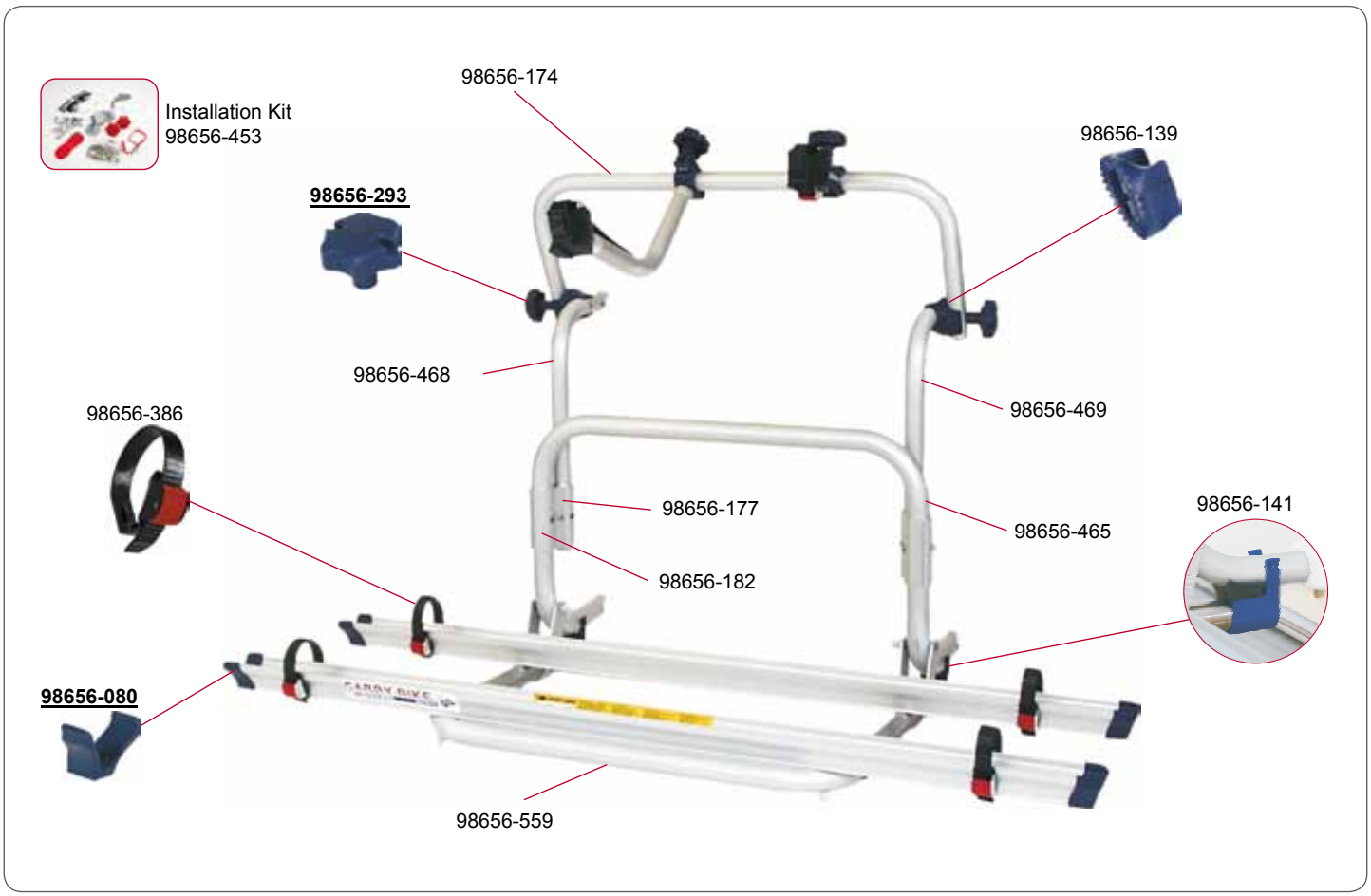

CARRY-BIKE® EURA MOBIL XL

02093-92-

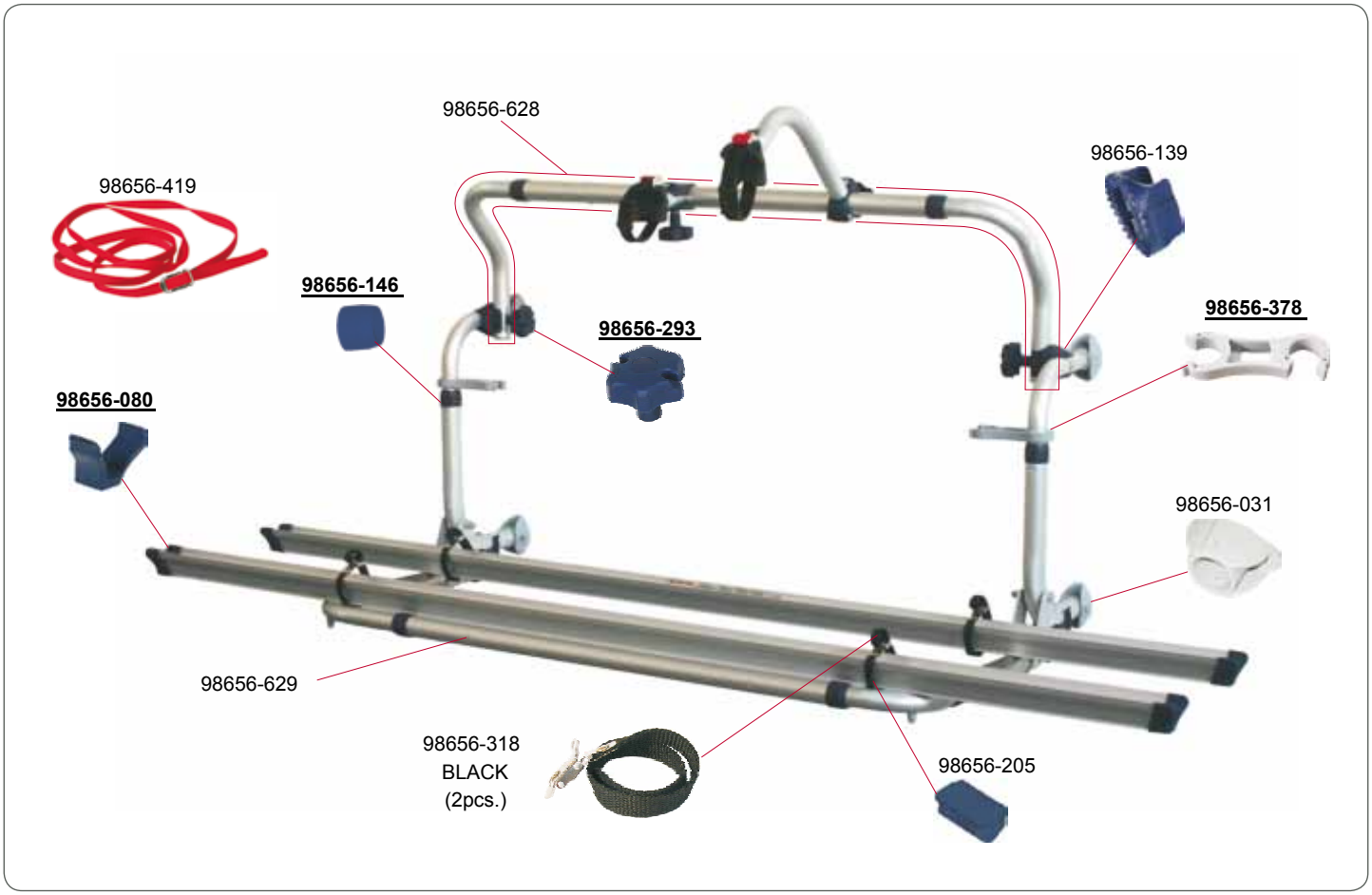

CARRY-BIKE® PRO PREMIUM

02093D17-

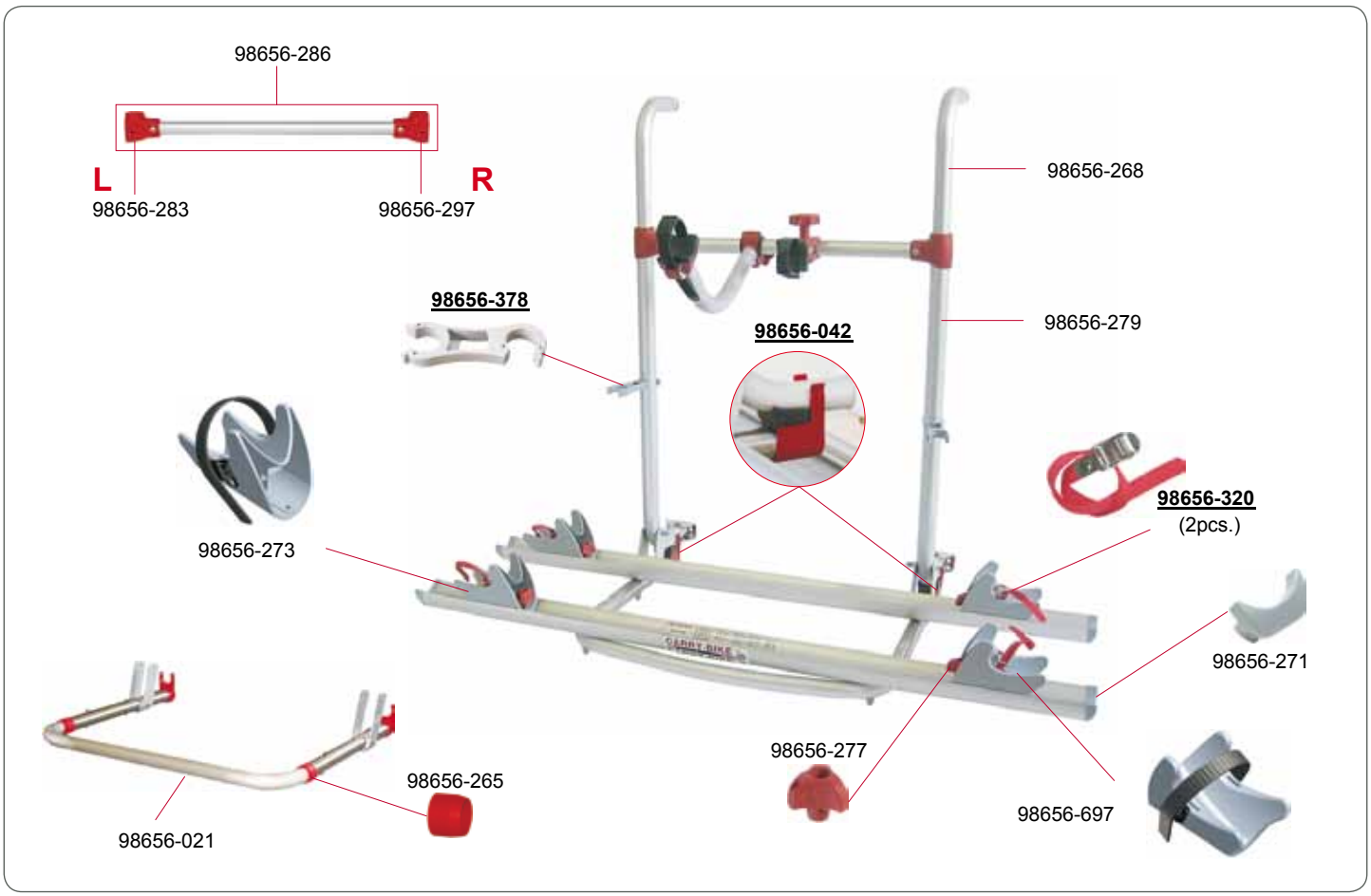

CARRY-BIKE® PRO C PREMIUM

02093D18-

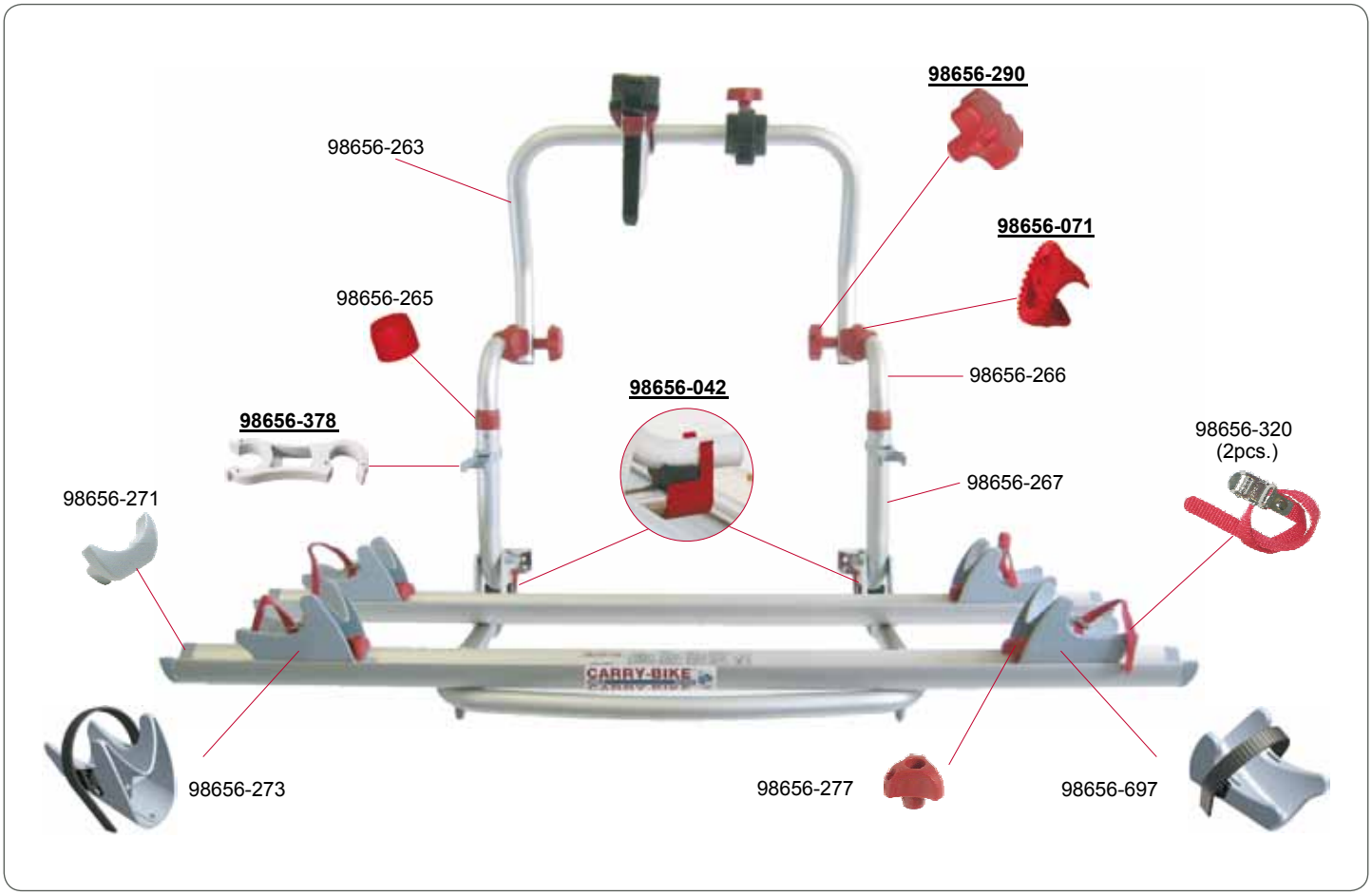

CARRY-BIKE® PREMIUM S

02093F17-

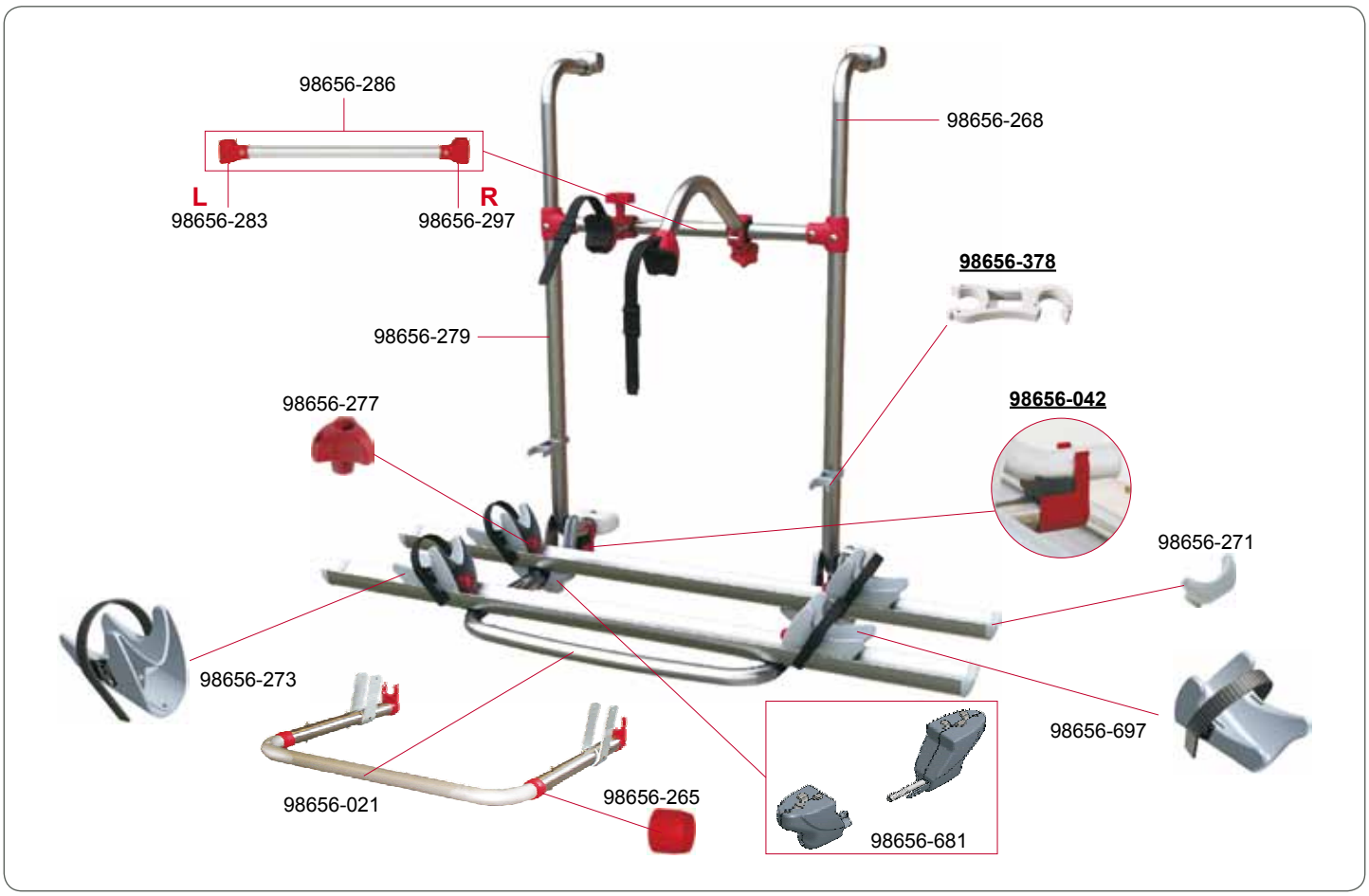

CARRY-BIKE® PREMIUM SC

02093F18-

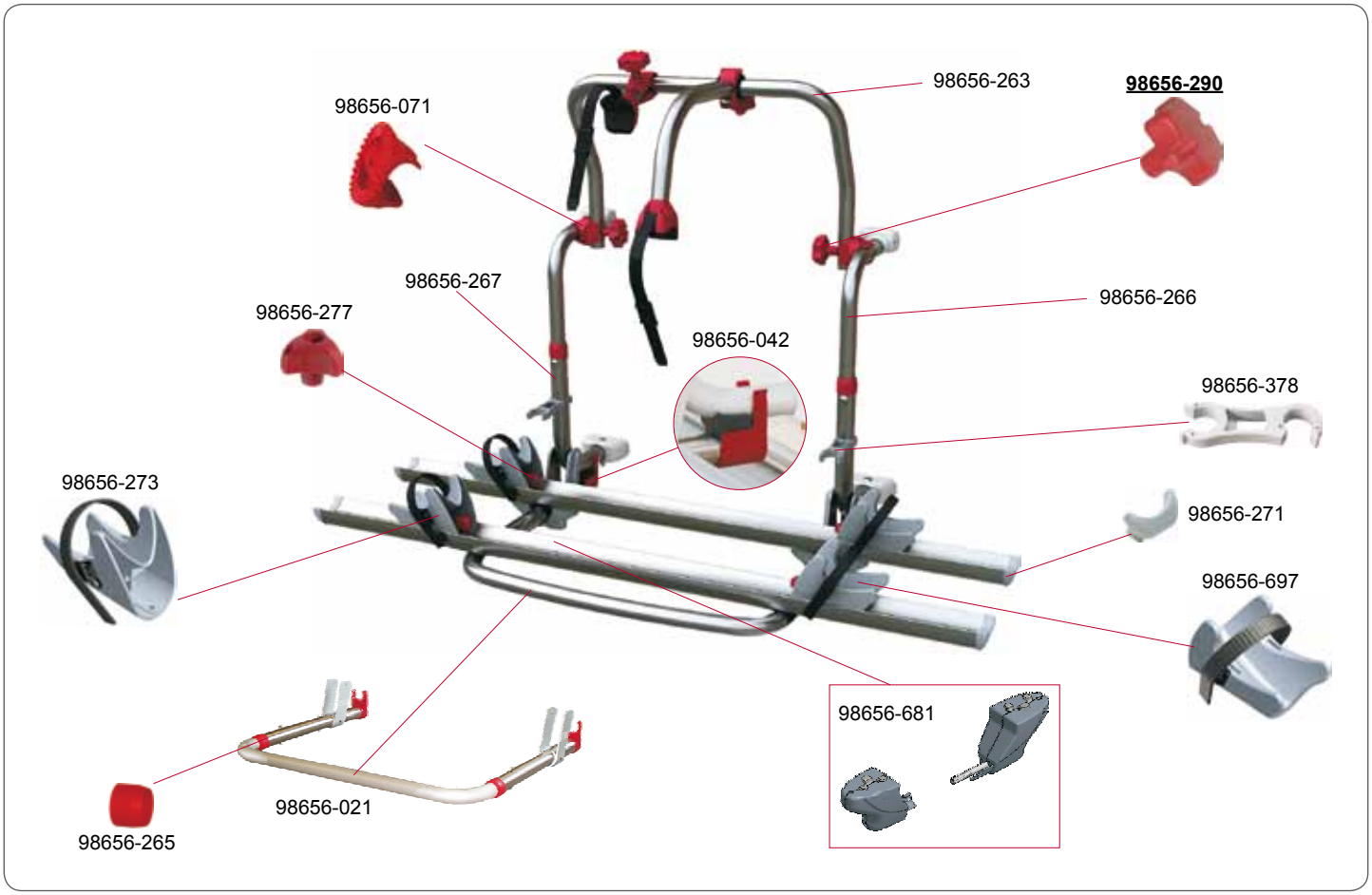

CARRY-BIKE® PRO DELUXE

02093C17-

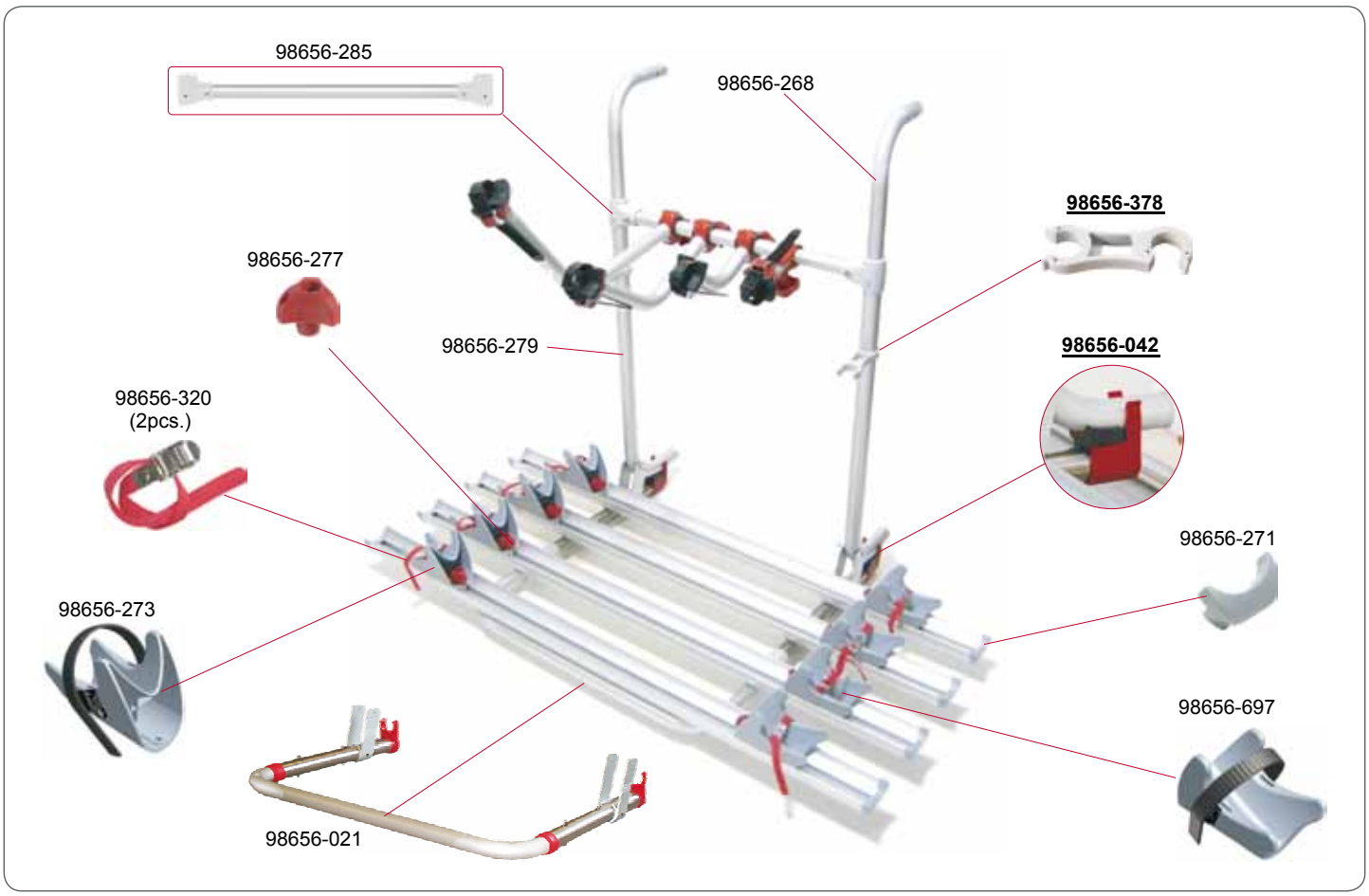

CARRY-BIKE® PRO C DELUXE

02093C18-

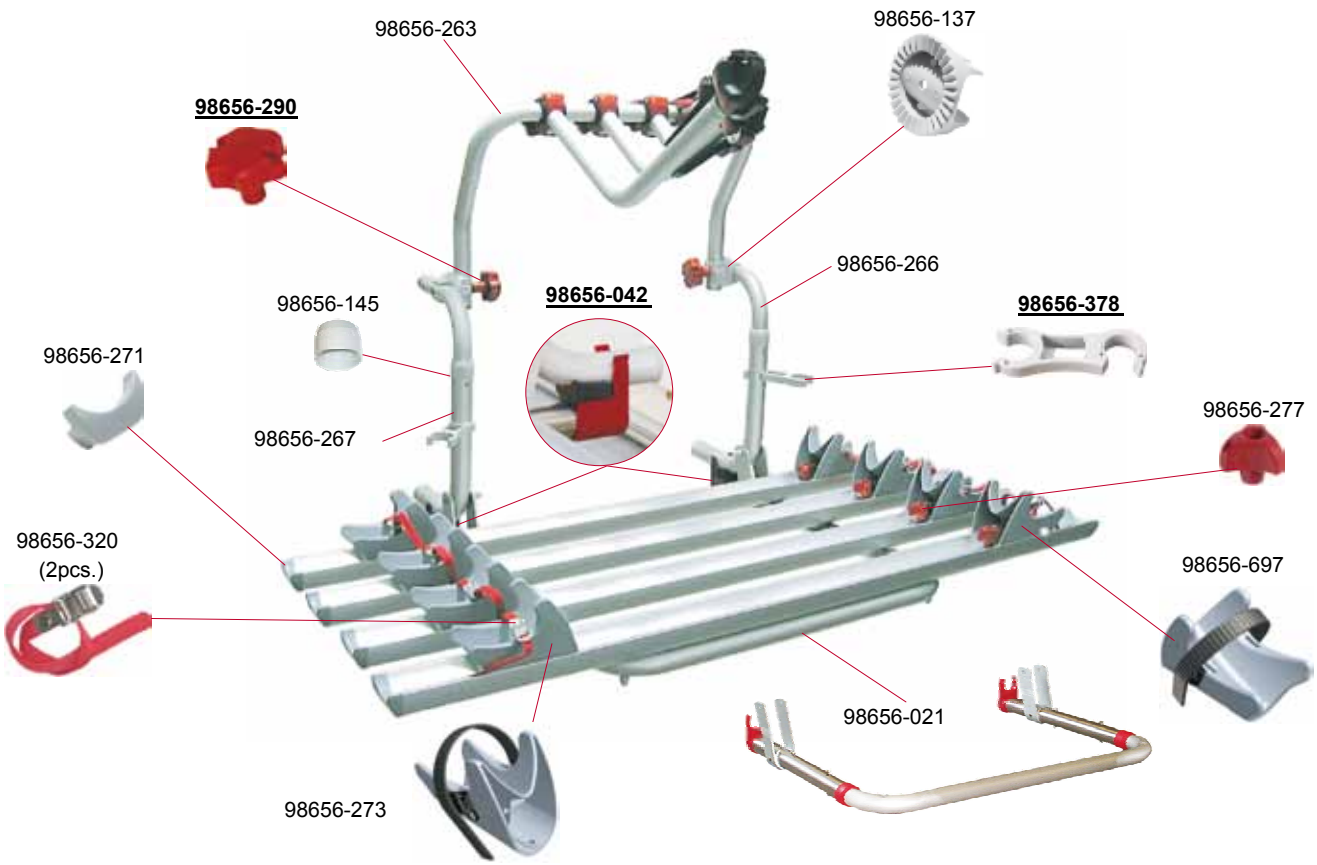

CARRY-BIKE® LIFT 77

02093A43-

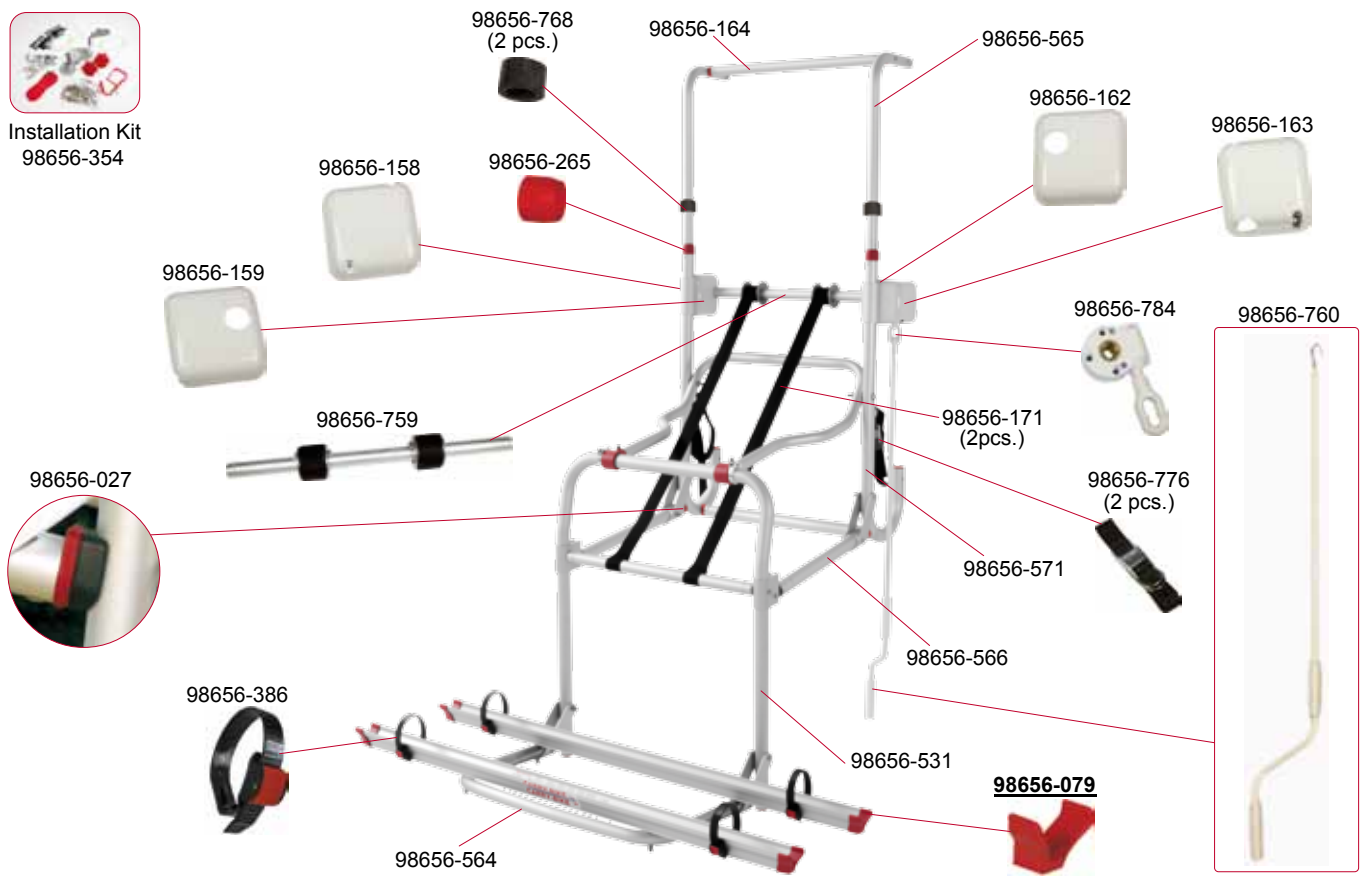

CARRY-BIKE® UL

02093-86- Version 2008

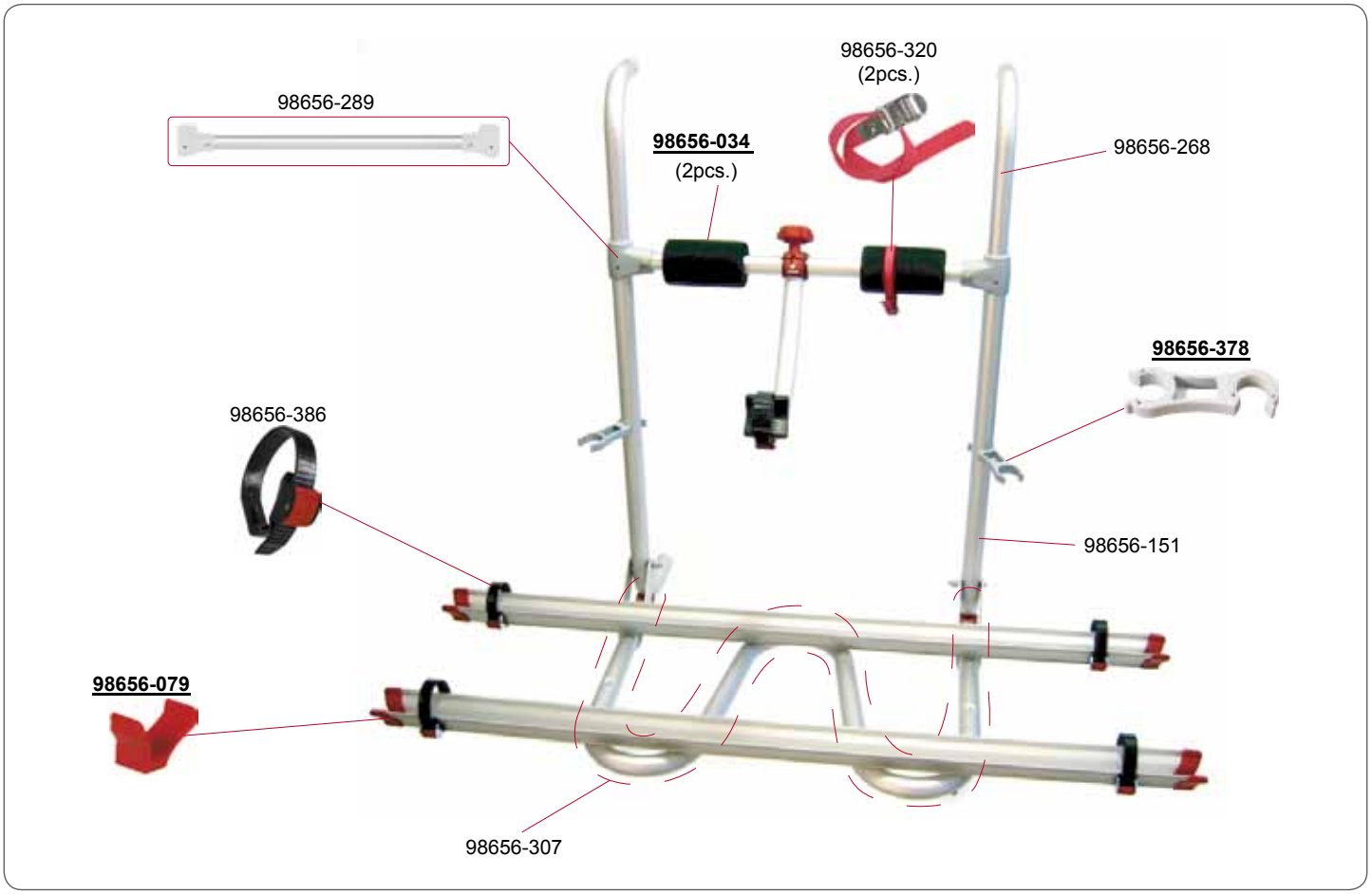

CARRY-BIKE® UL

02093-86- Version 2007

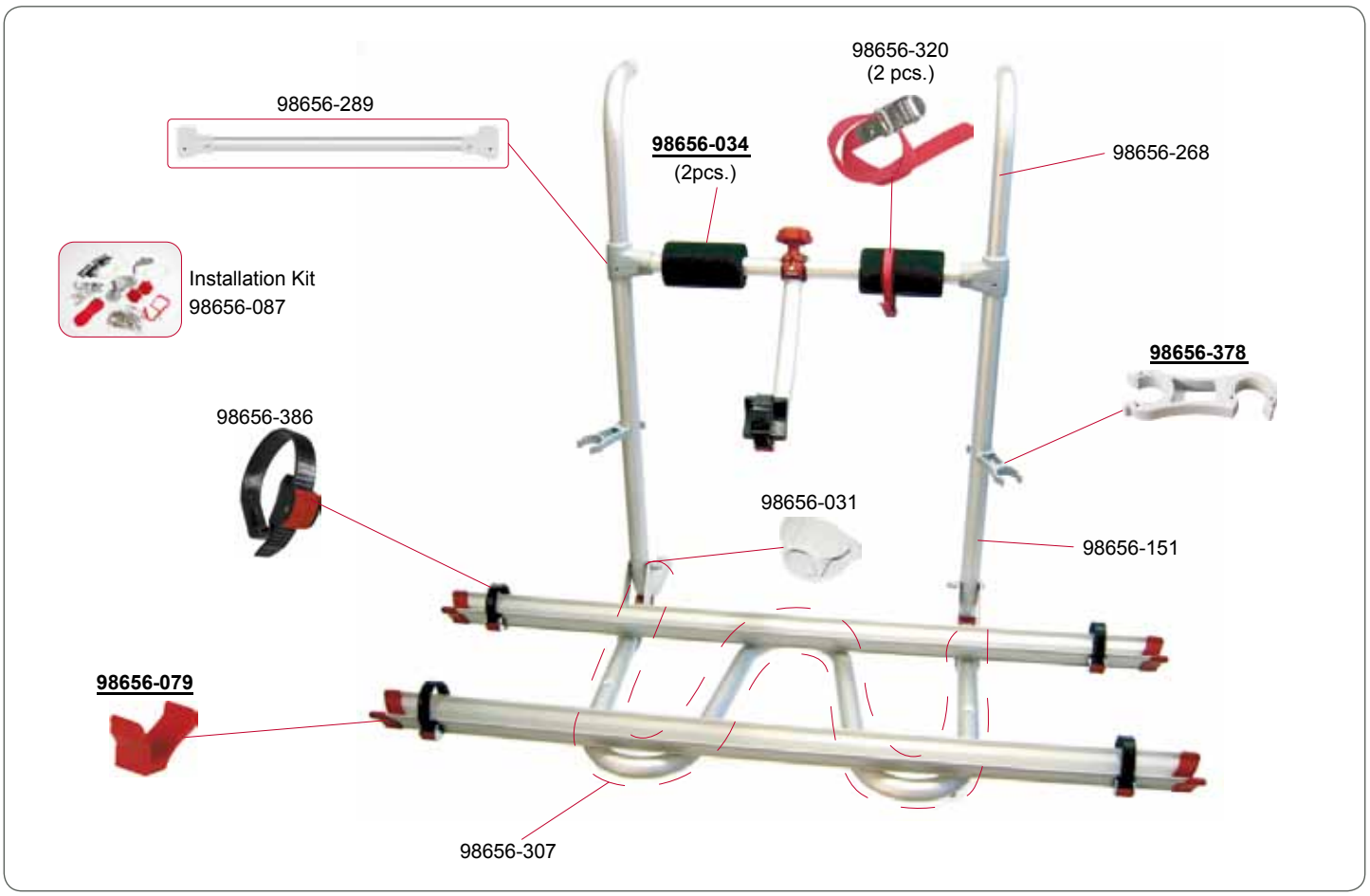

CARRY-BIKE® UL

02093-16- Before 2007

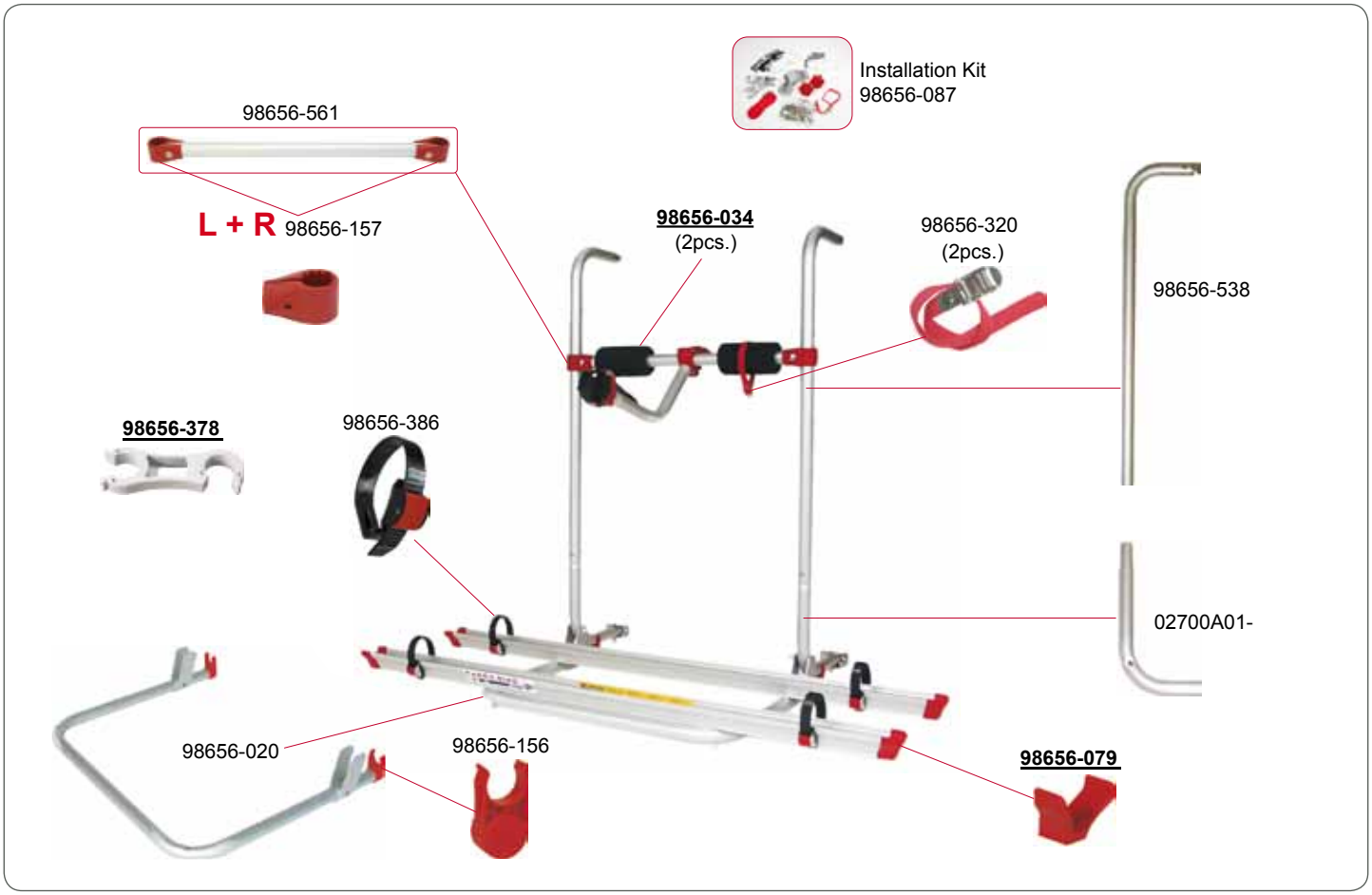

CARRY-BIKE® CL

02093-87- Version 2008

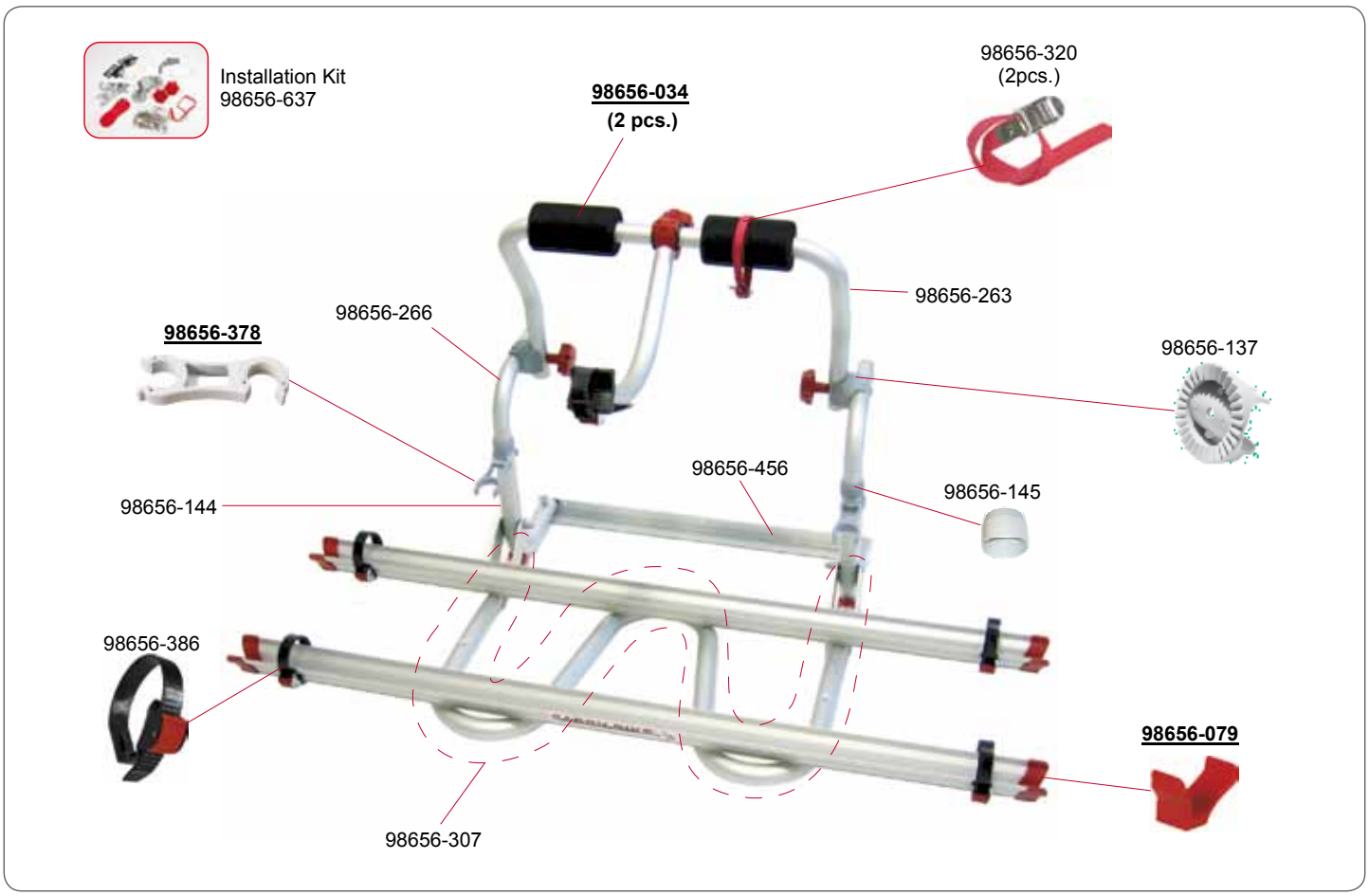

CARRY-BIKE® CL

02093-87- Version 2007

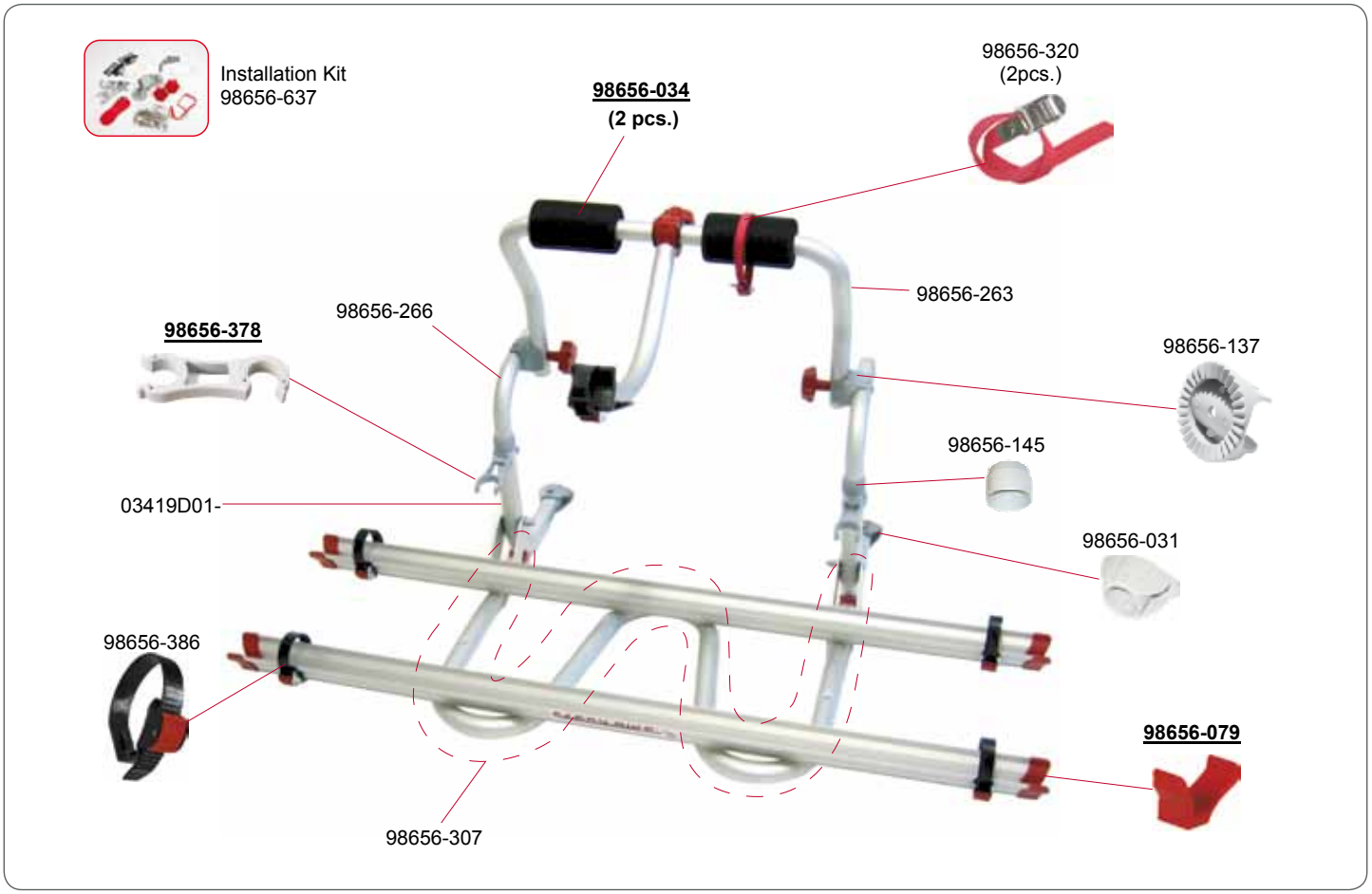

CARRY-BIKE® CL

02093-08- Before 2007

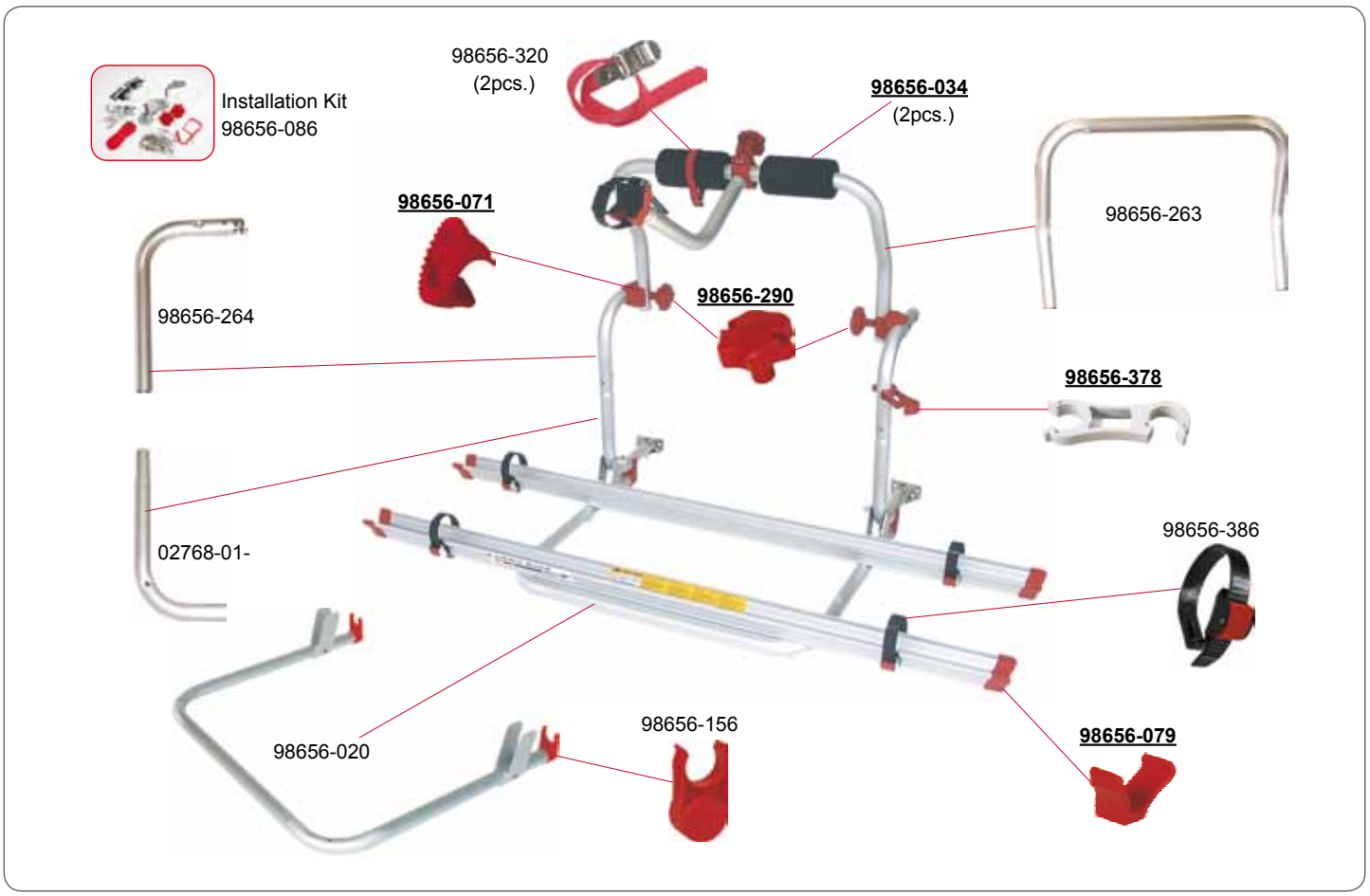

CARRY-BIKE® TRIGANO

02093-57-

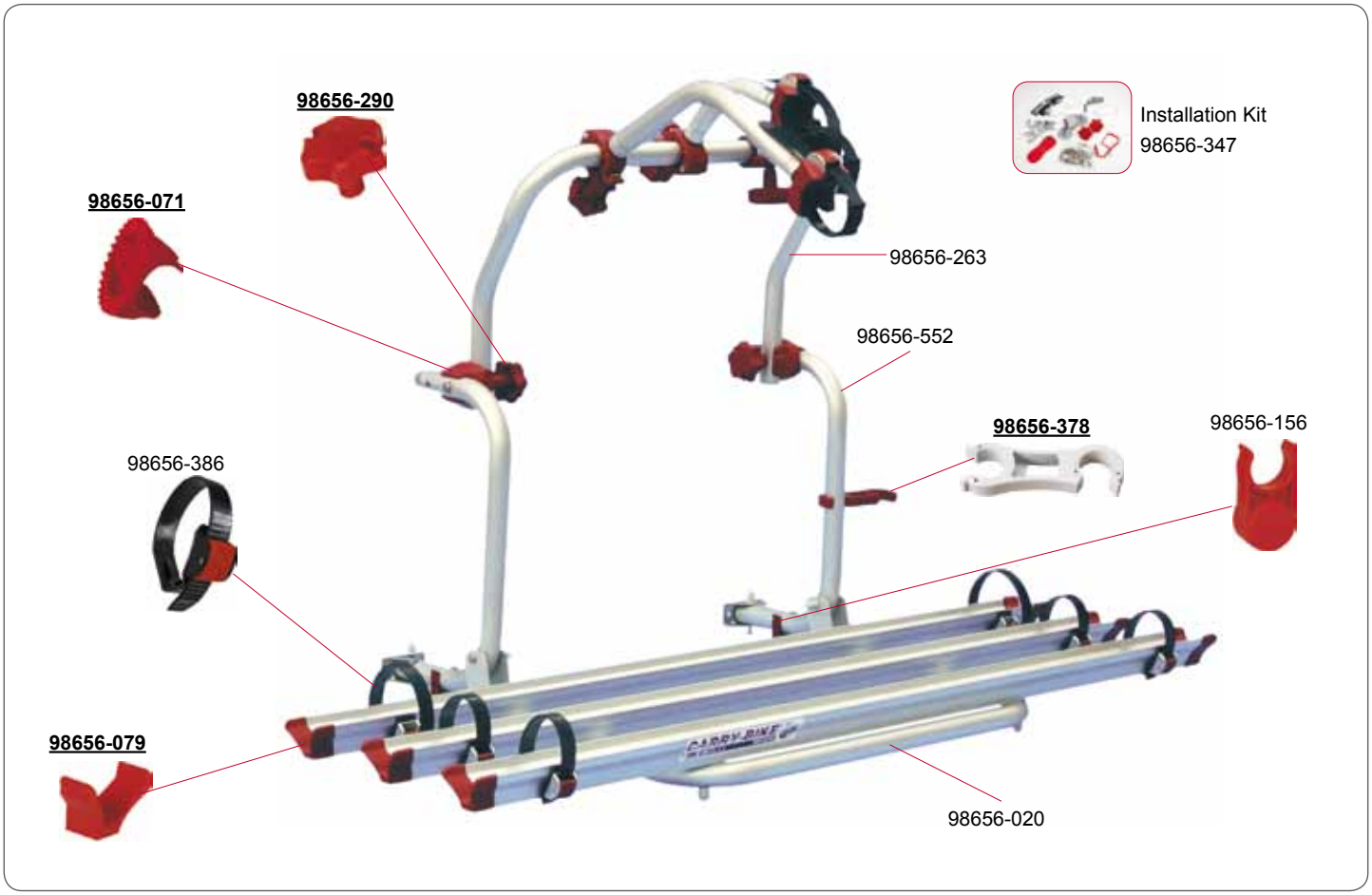

CARRY-BIKE® JOINT

02093-14-

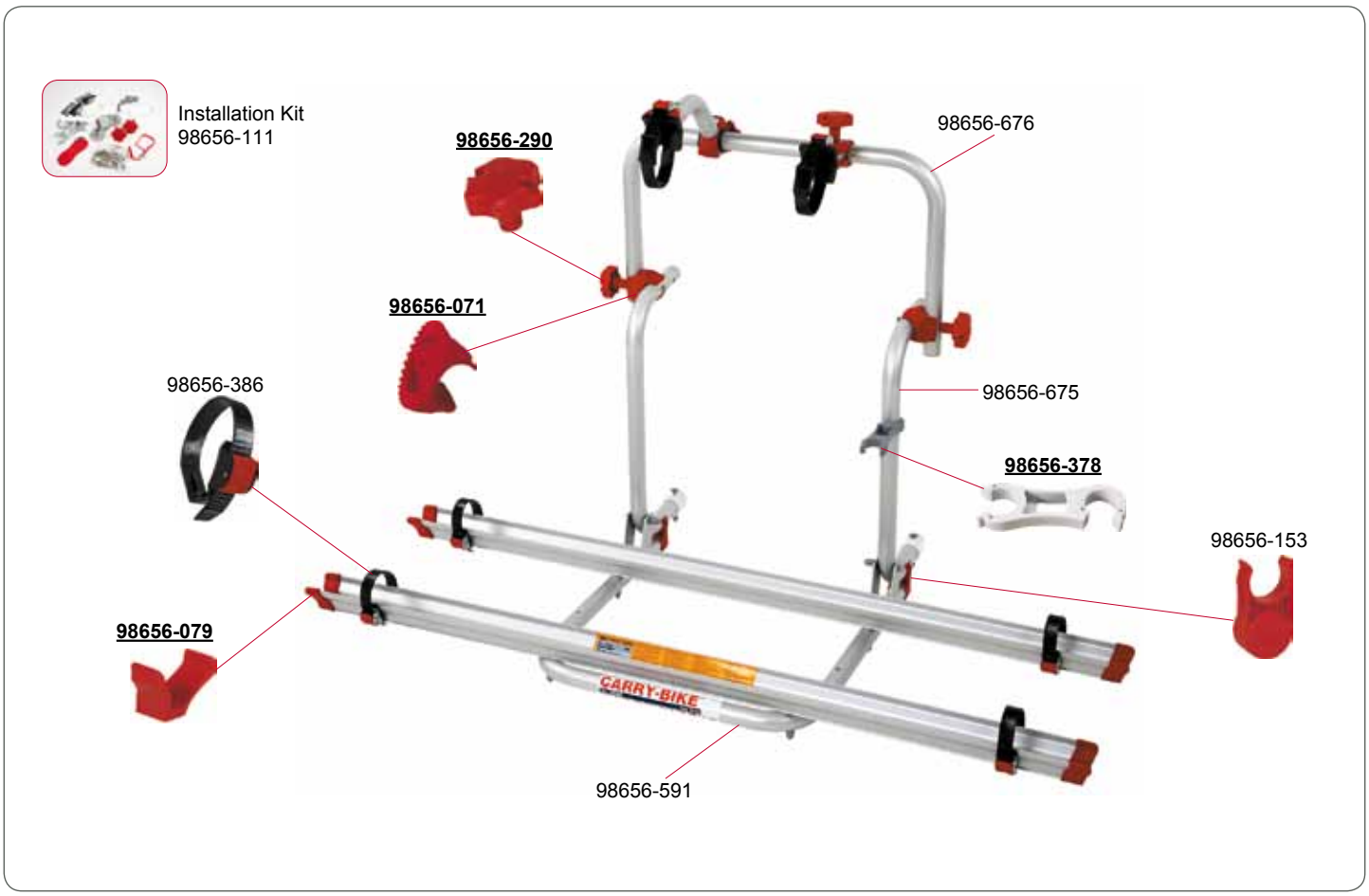

CARRY-BIKE® SE - SEA

02093-69-

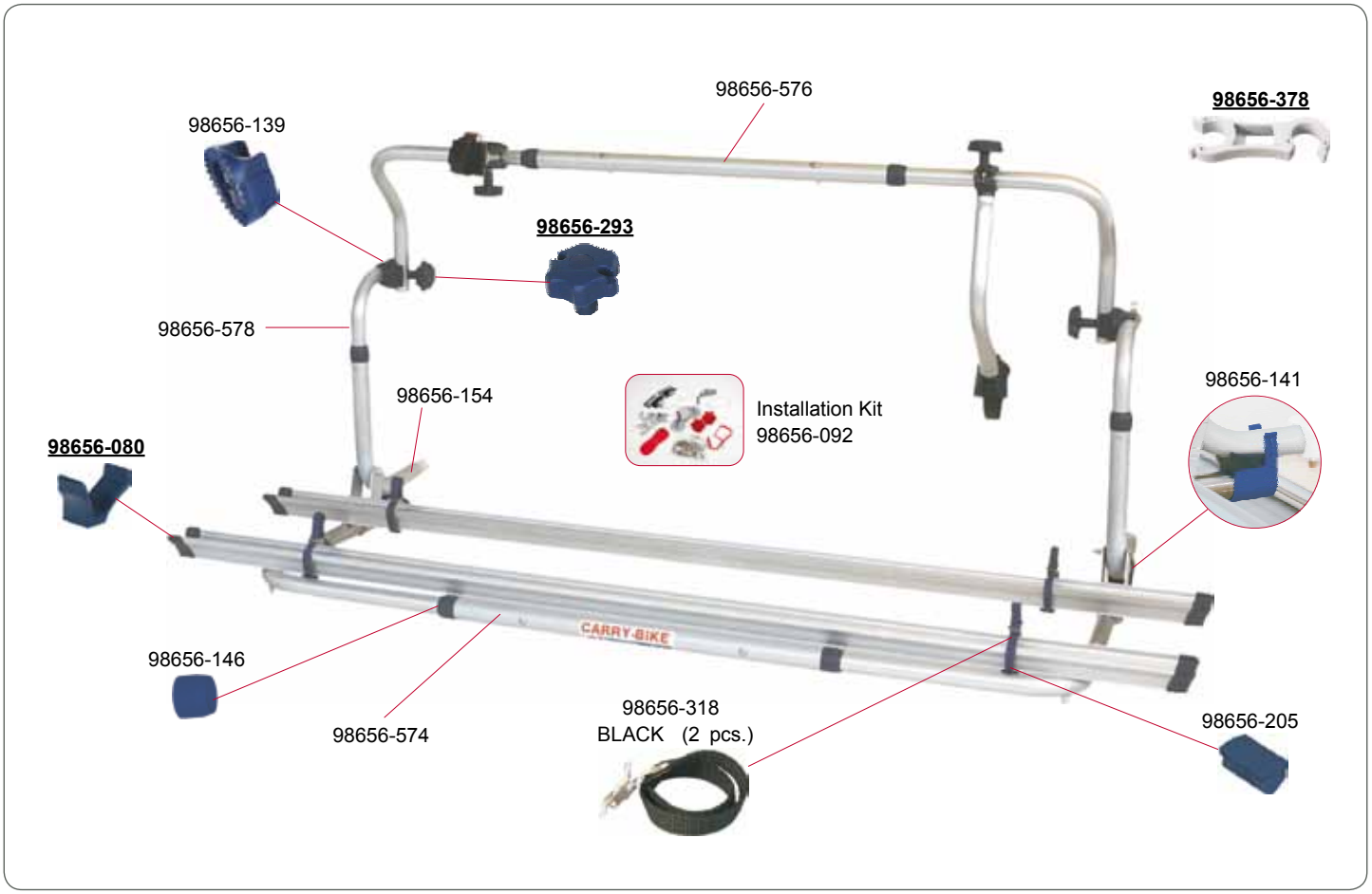

CARRY-BIKE® SE

02093A69-

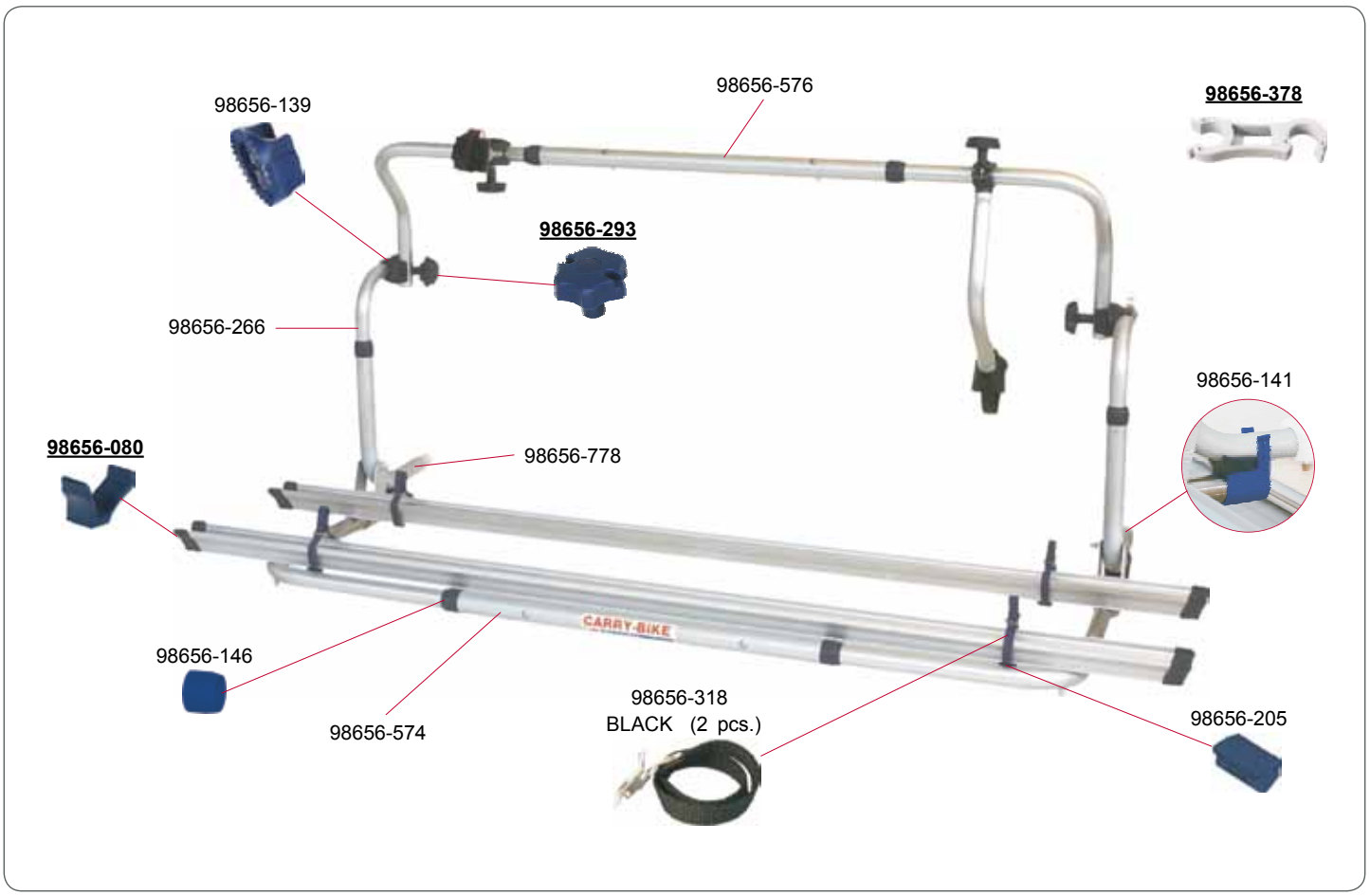

CARRY-BIKE® CARAVAN XL A

02093-01A

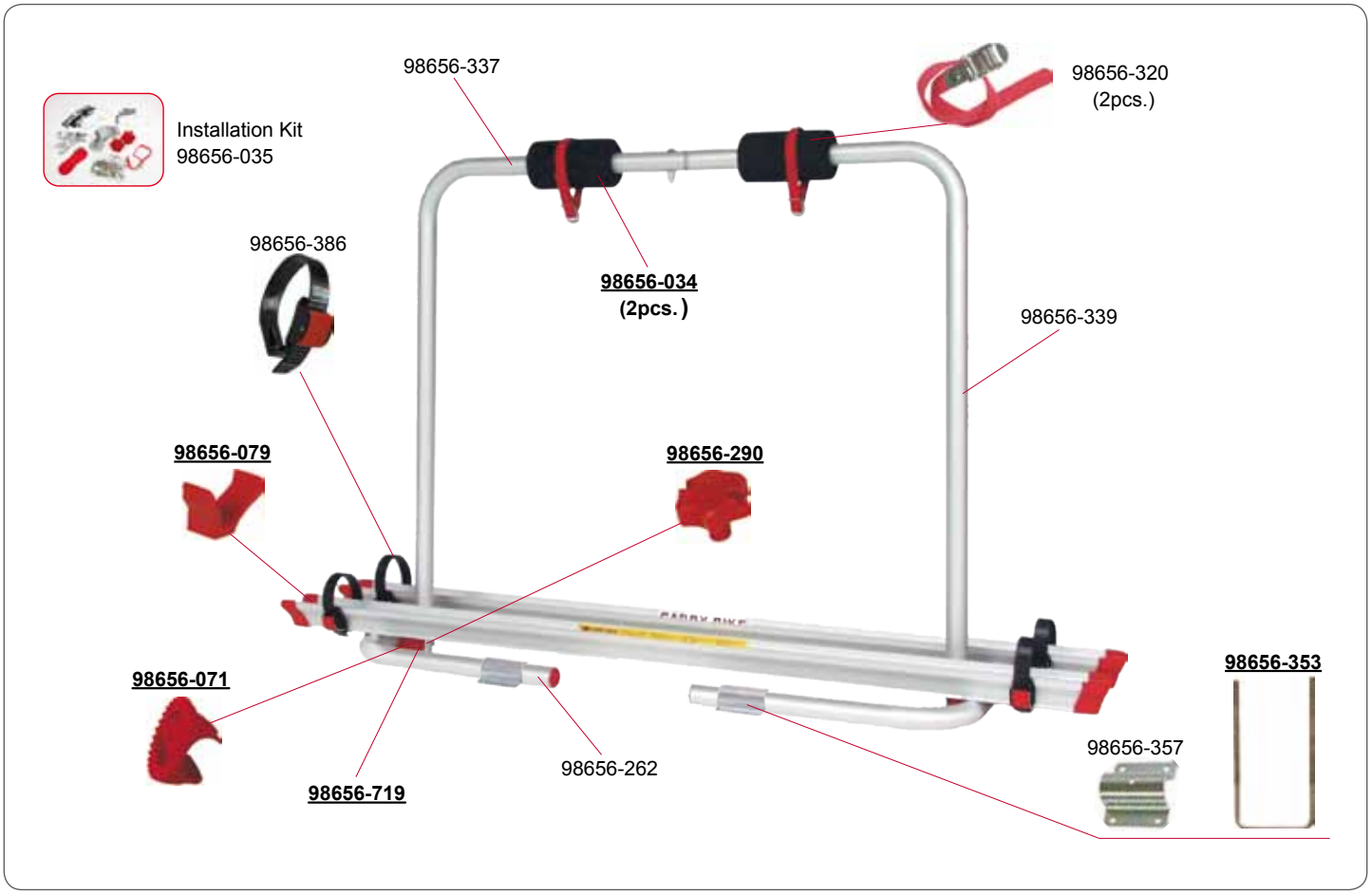

CARRY-BIKE® CARAVAN XL A PRO

02093A91-

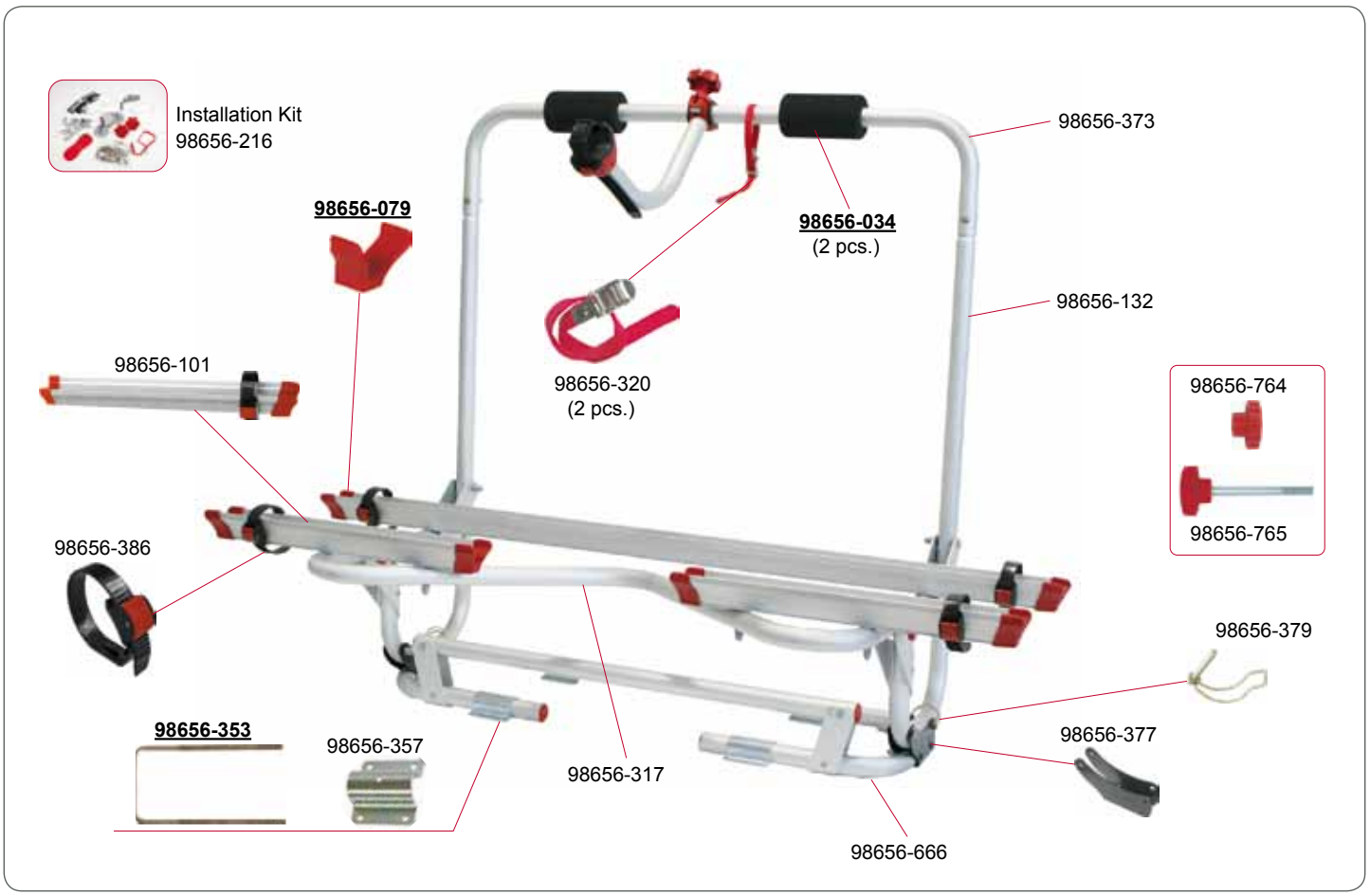

CARRY-BIKE® CARAVAN XL A PRO 200

02093C32-

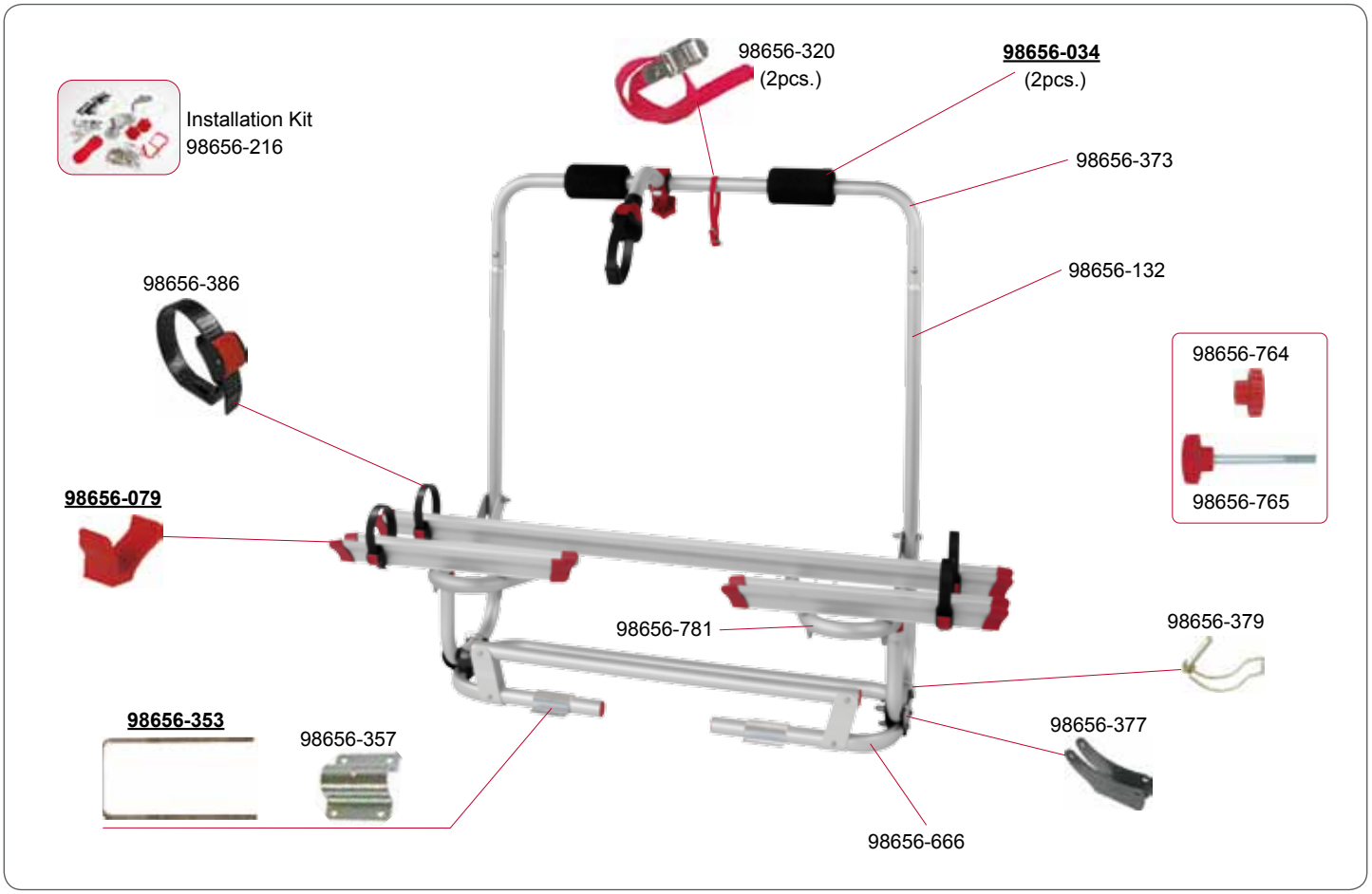

CARRY-BIKE® CARAVAN XL A PRO 200

02093A32-

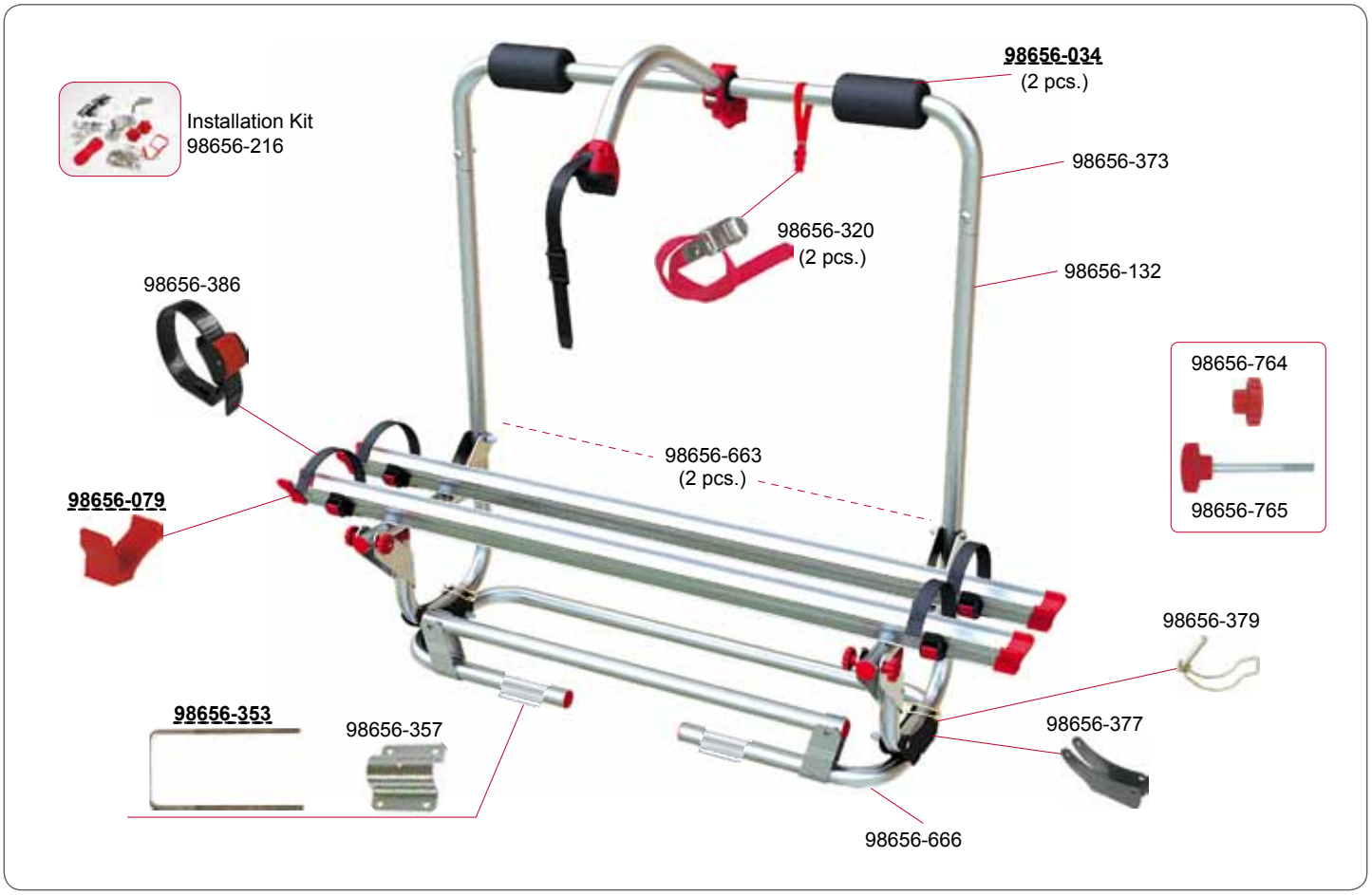

CARRY-BIKE® CARAVAN XL A PRO 200

02093-32-

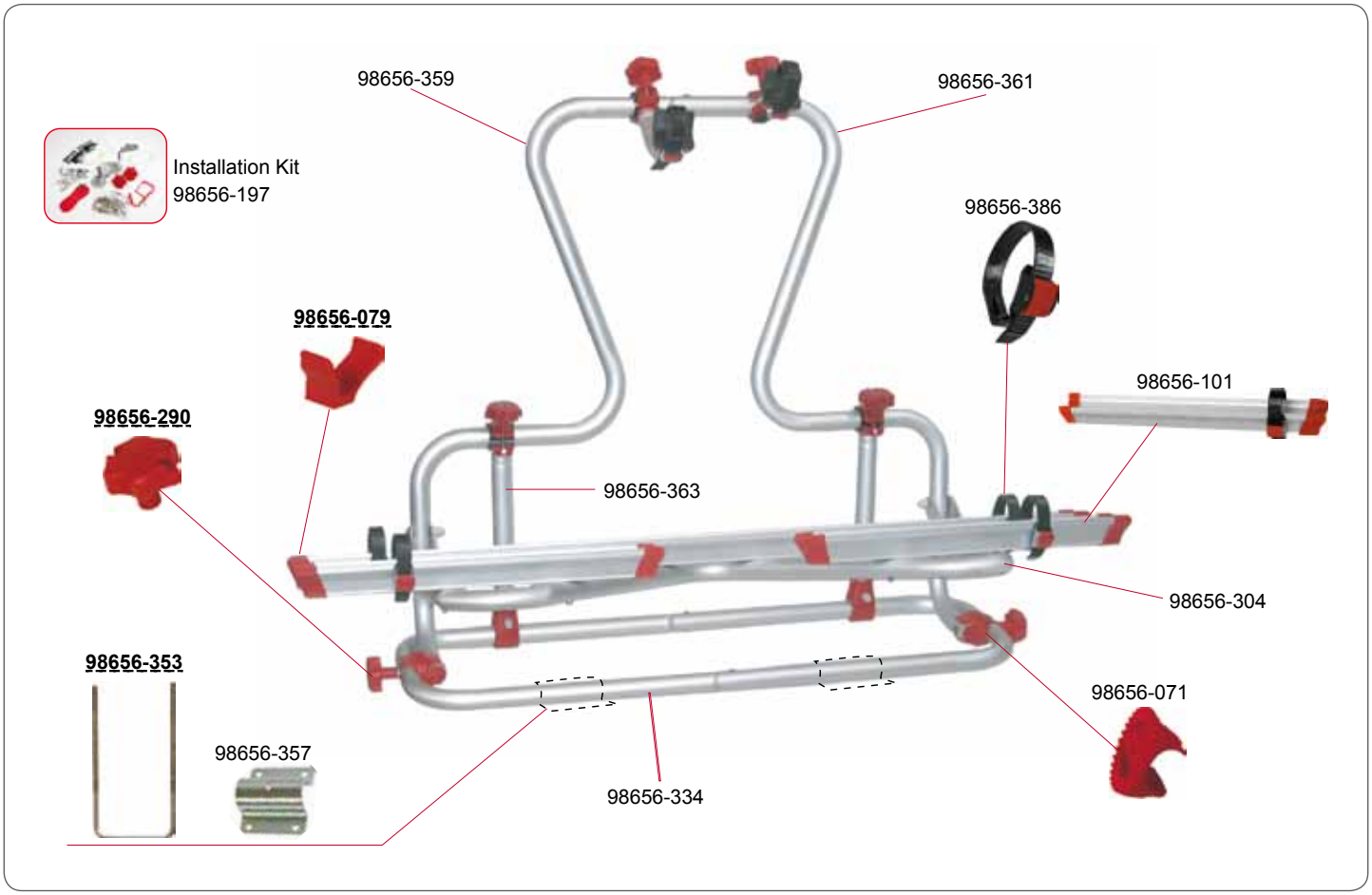

CARRY-BIKE® CARAVAN XL A PRO 300 > 08 CARAVAN XL A PRO 300 < 08

02093-91-
02093-82-

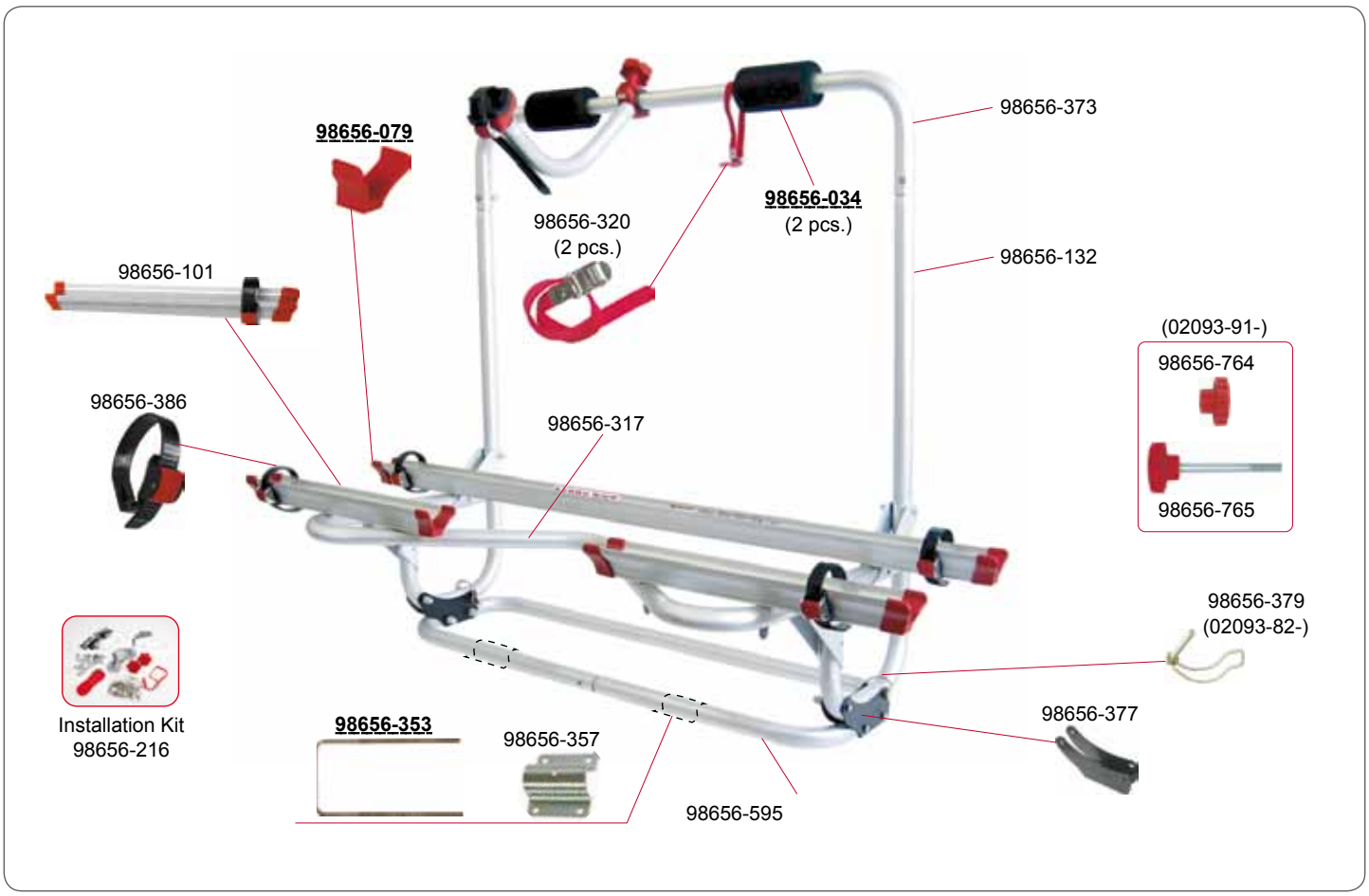

CARRY-BIKE® CARAVAN HOBBY

02093-77-

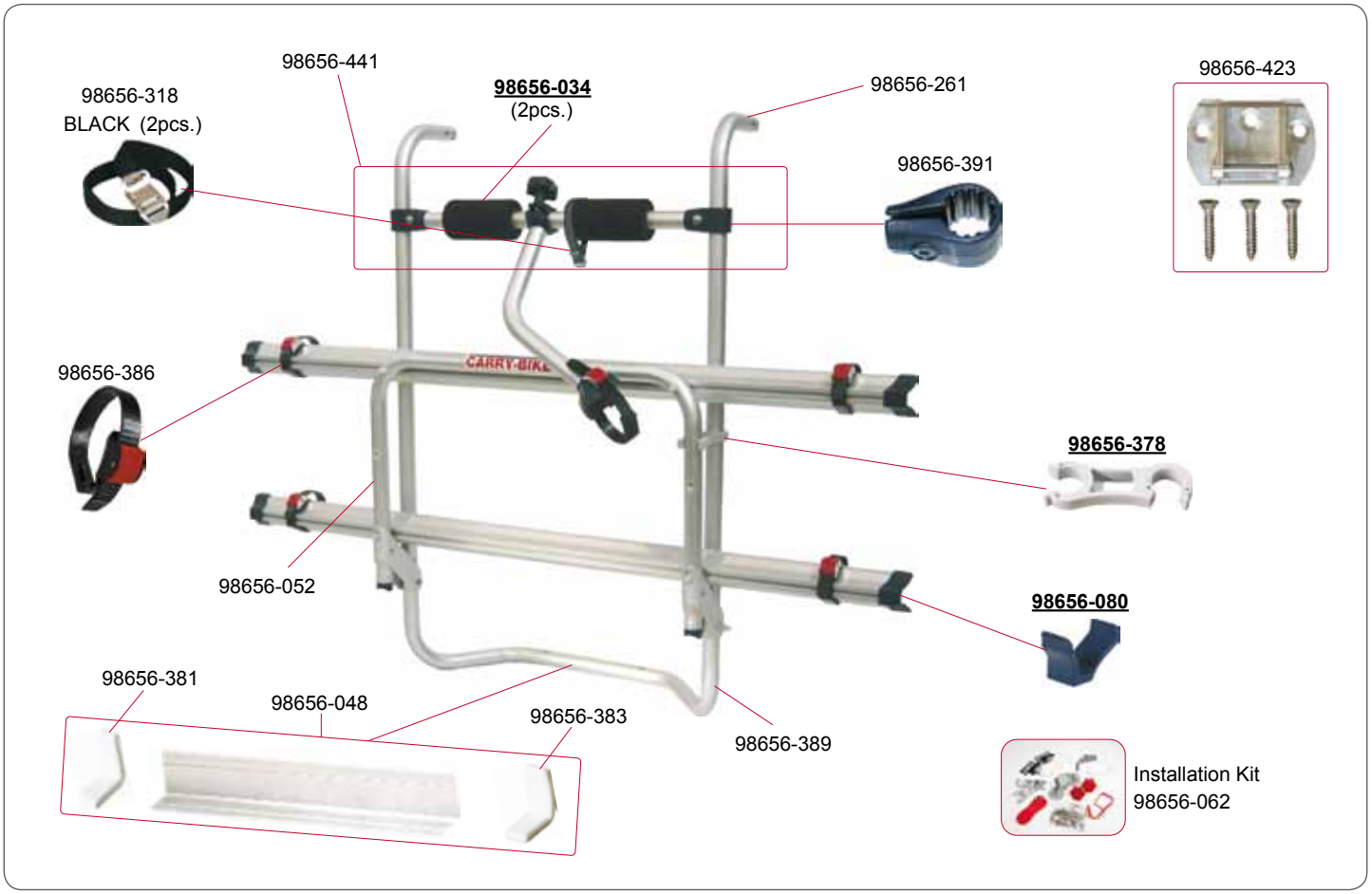

CARRY-BIKE® CARAVAN UNIVERSAL

02093-76-

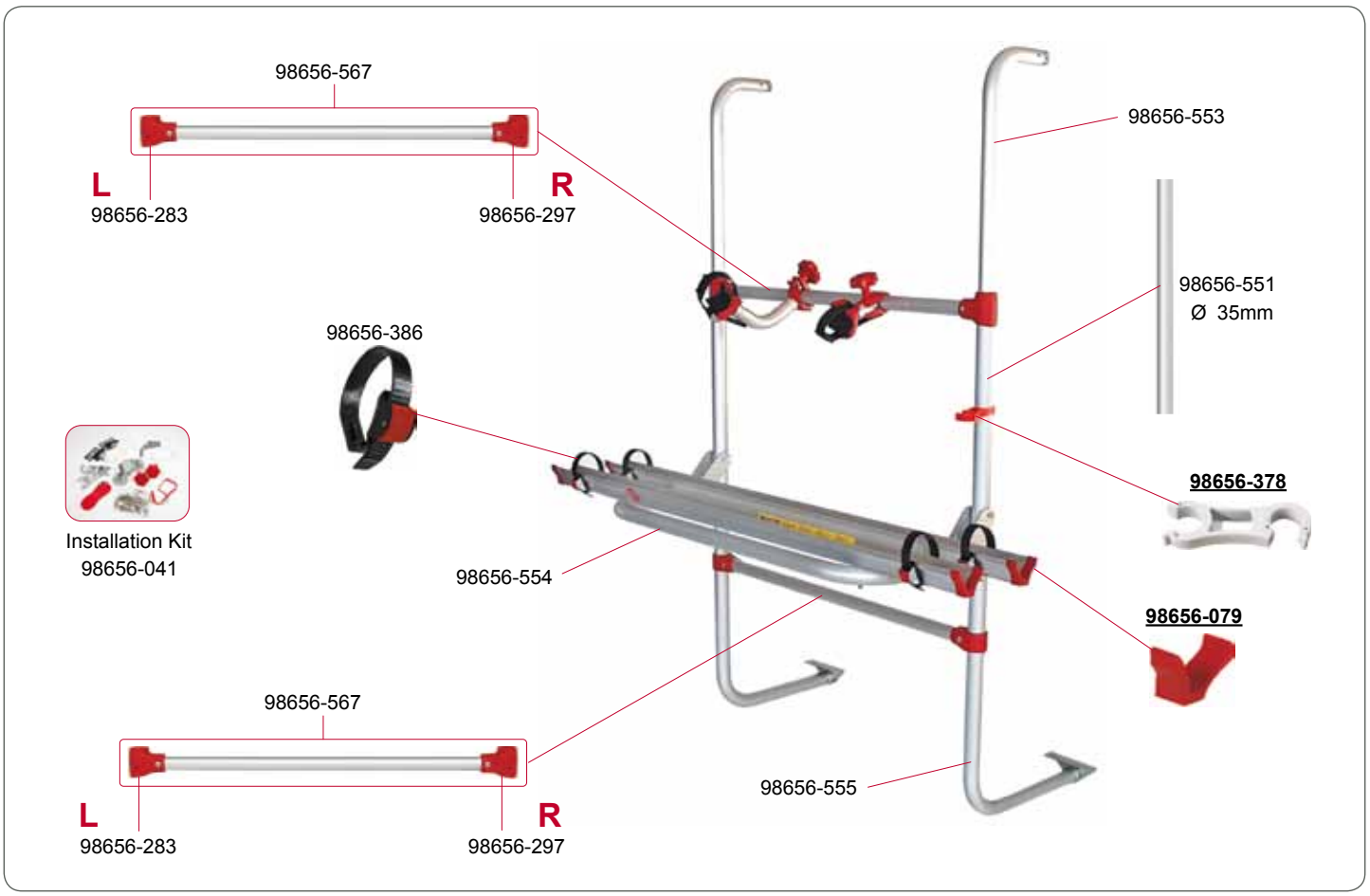

CARRY-BIKE® SIMPLE PLUS 200

02093-36-

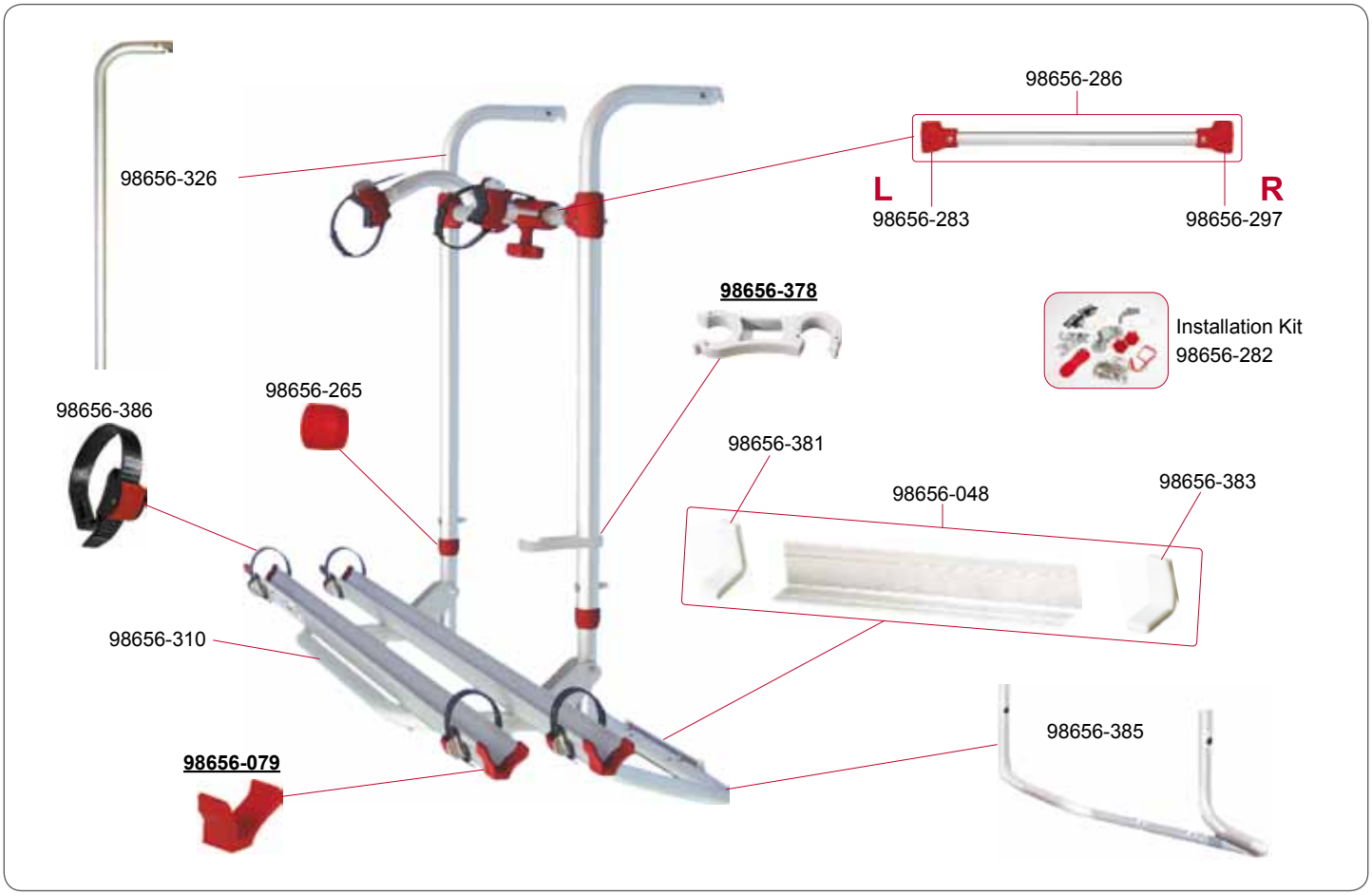

CARRY-BIKE® VW T5

02093-71-

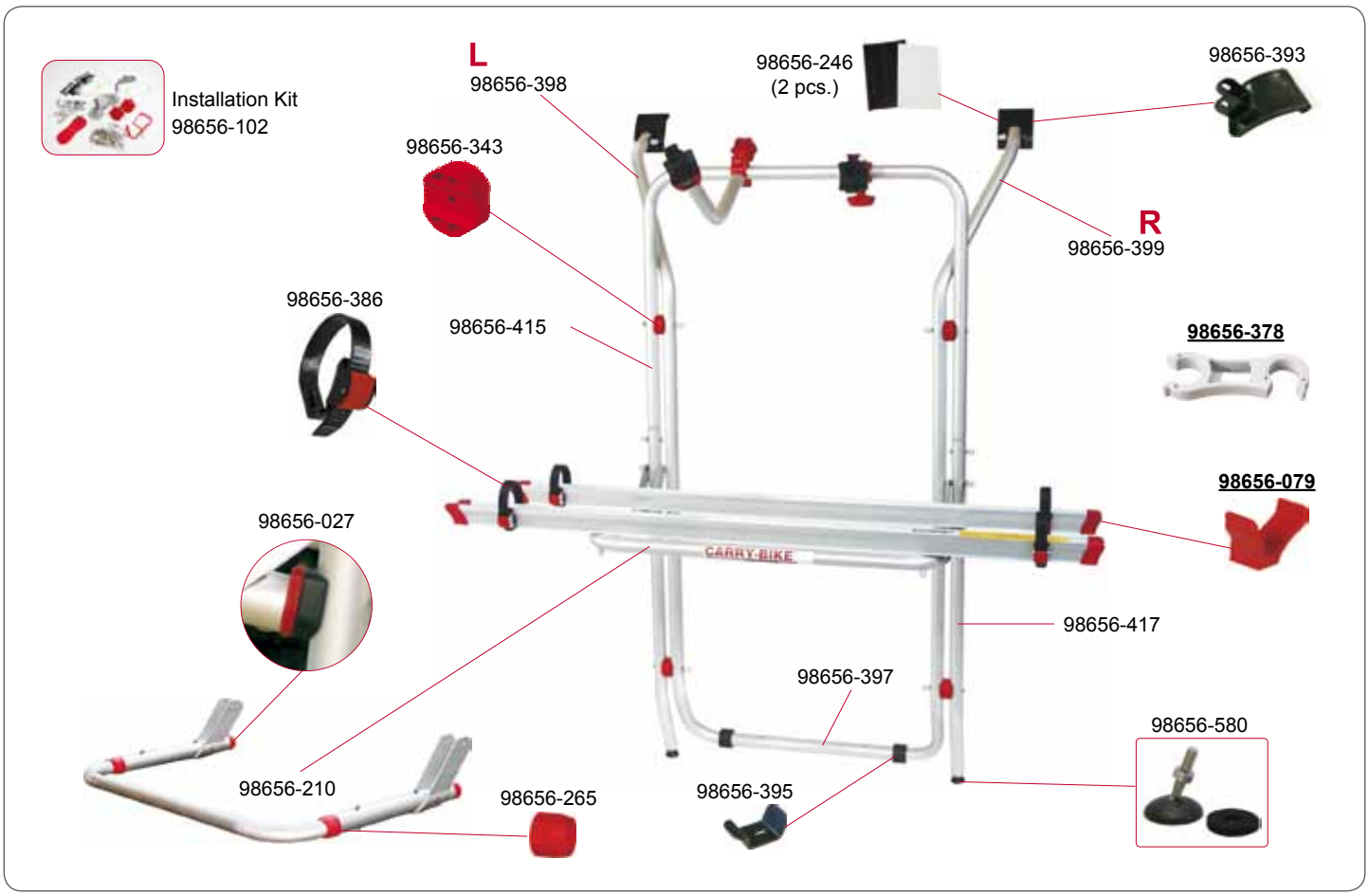

CARRY-BIKE® VW T4

02093H01-

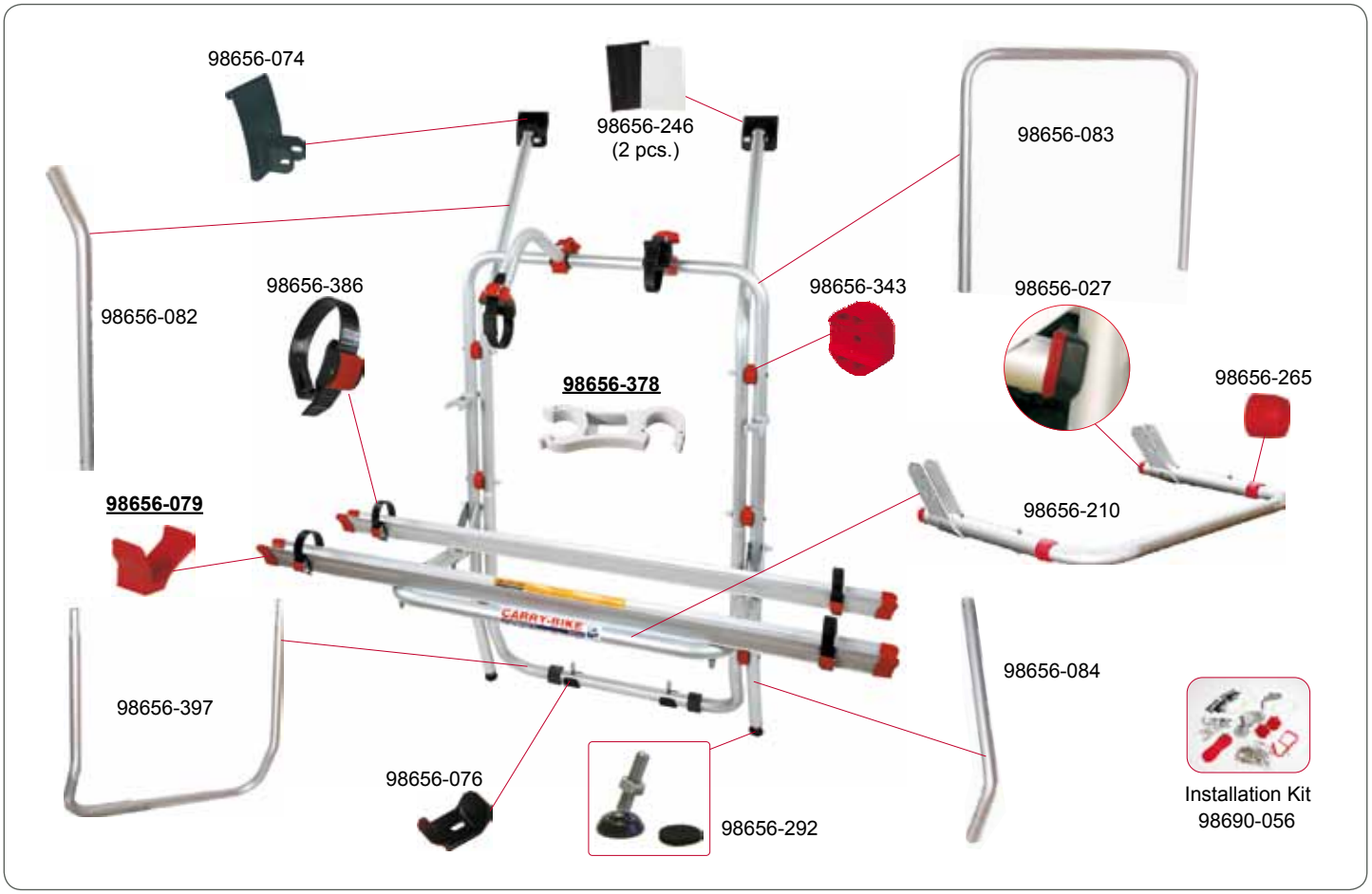

CARRY-BIKE® VW T5 D

02093-79-

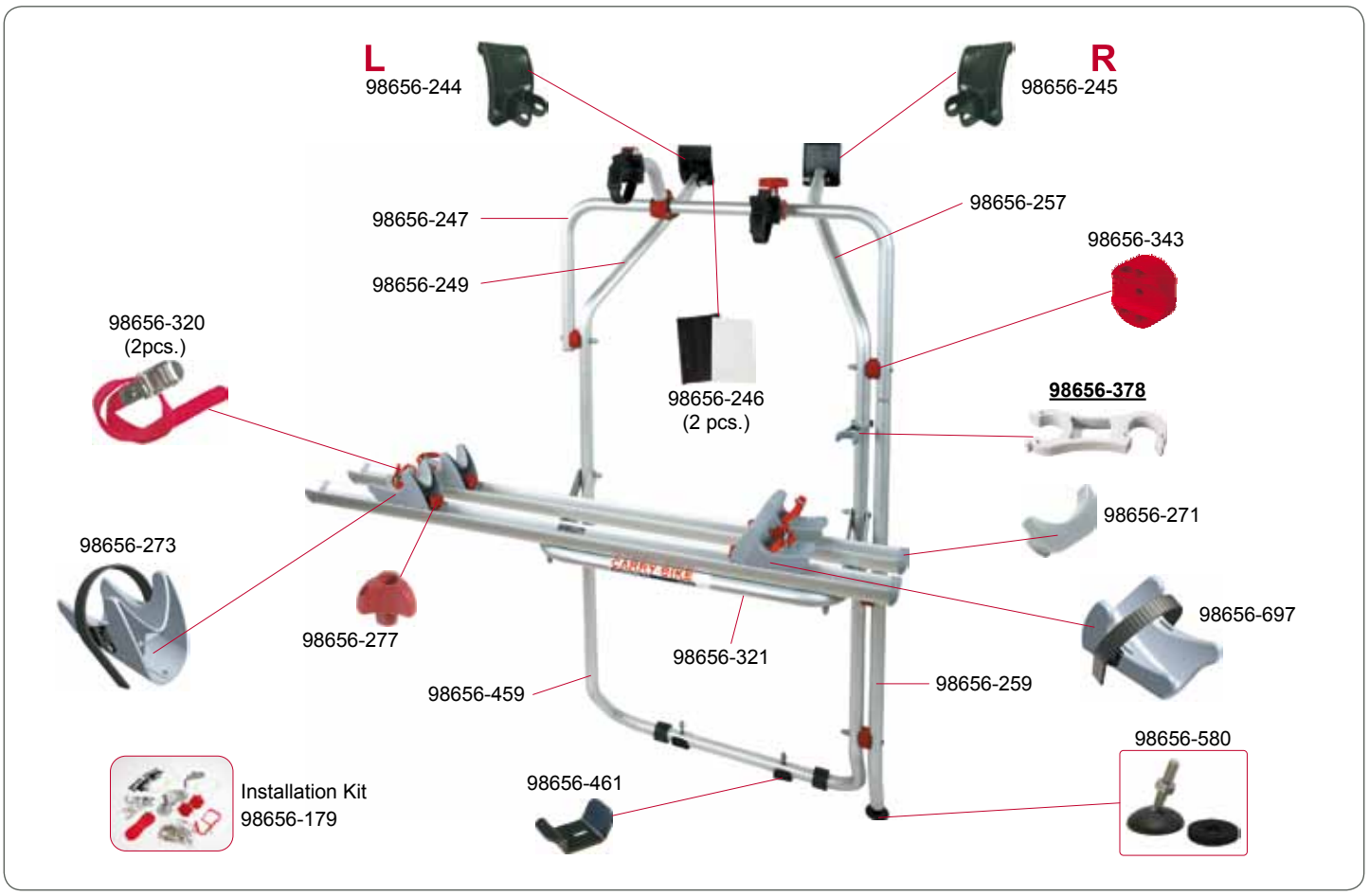

CARRY-BIKE® VW T4 D

02093T01-

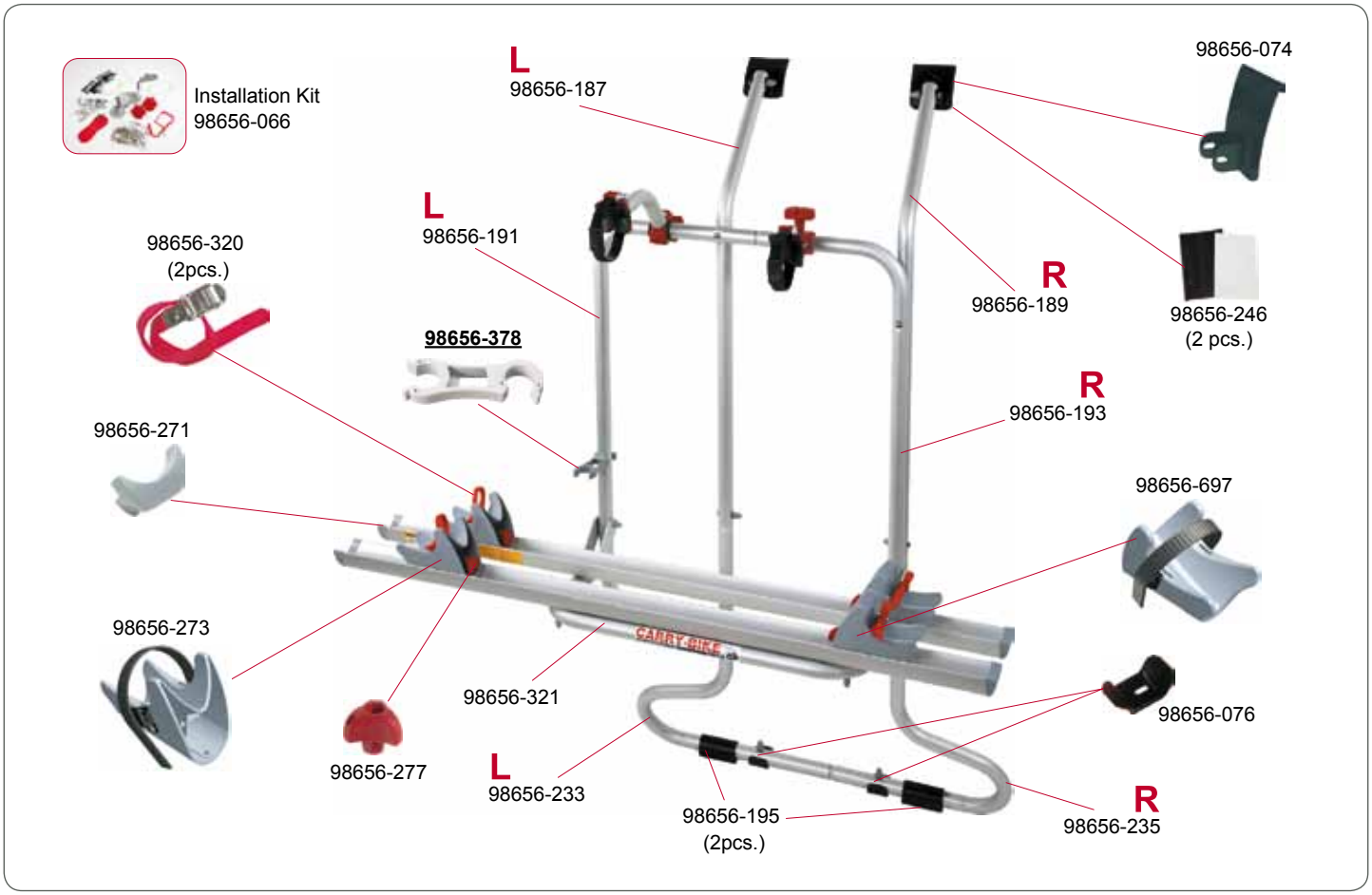

CARRY-BIKE® VW T3 - T25

02093C01-

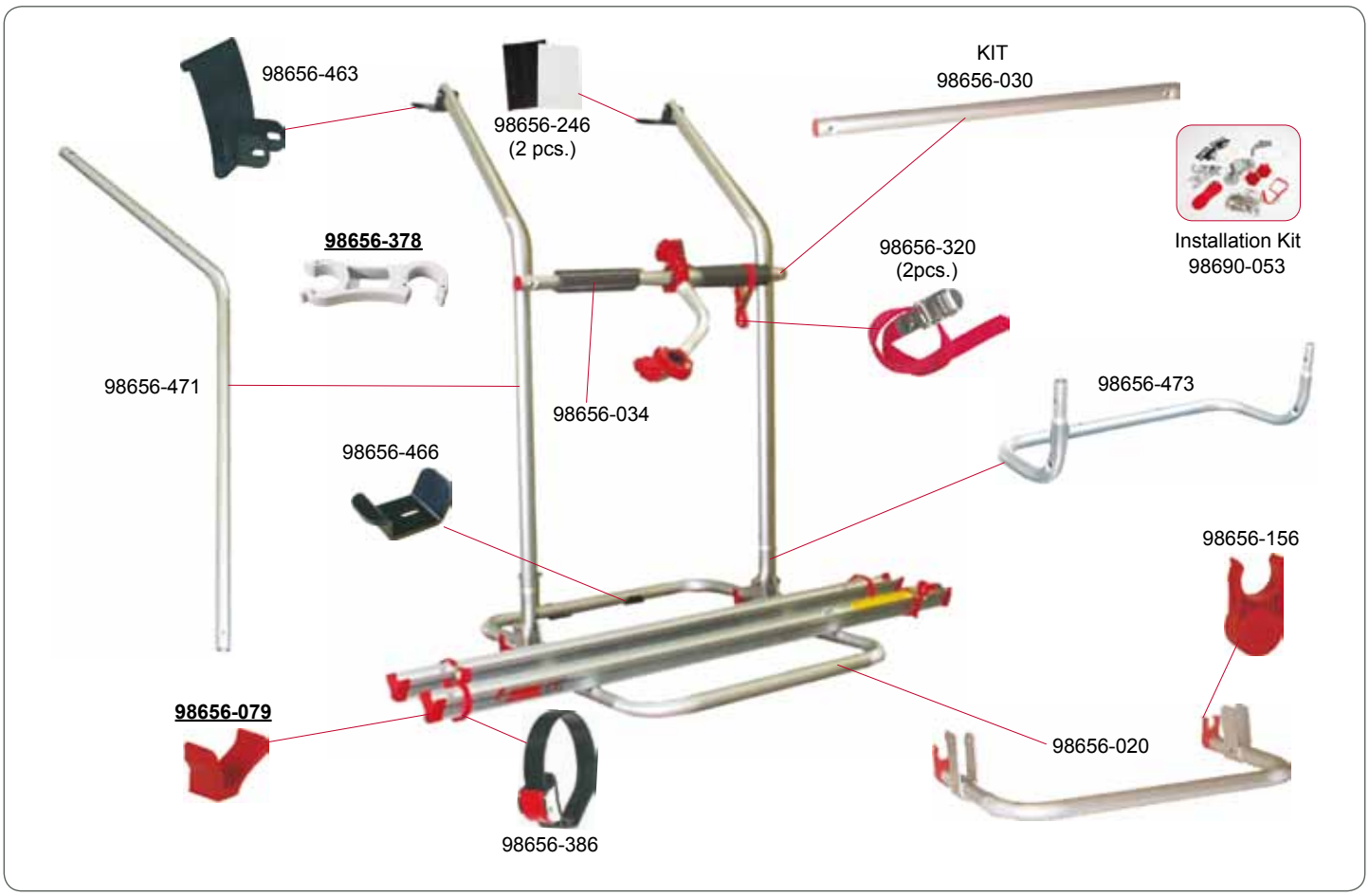

CARRY-BIKE® VW T2

02093-63-

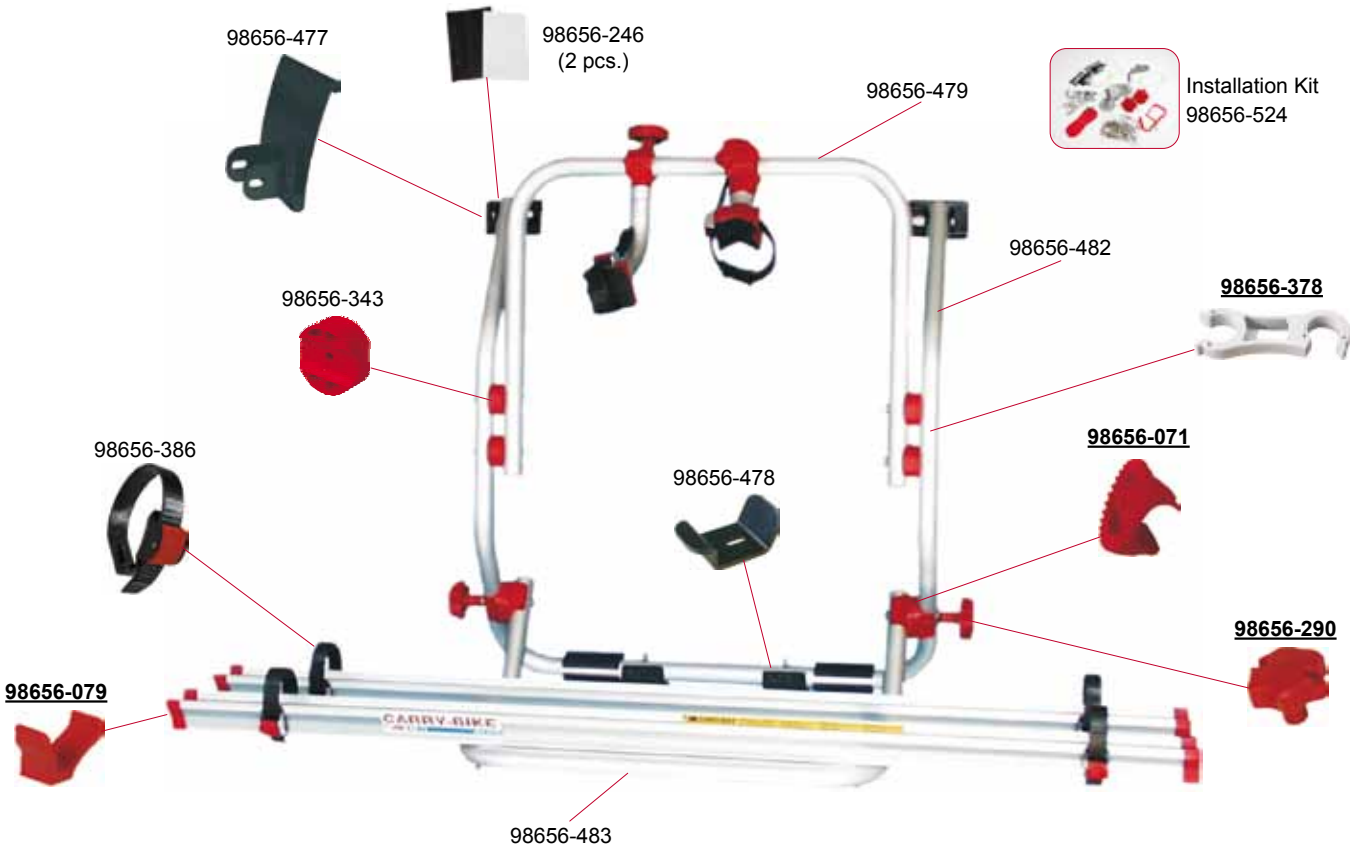

CARRY-BIKE® 200 DJ FIAT DUCATO > 06/2006

02093B89-

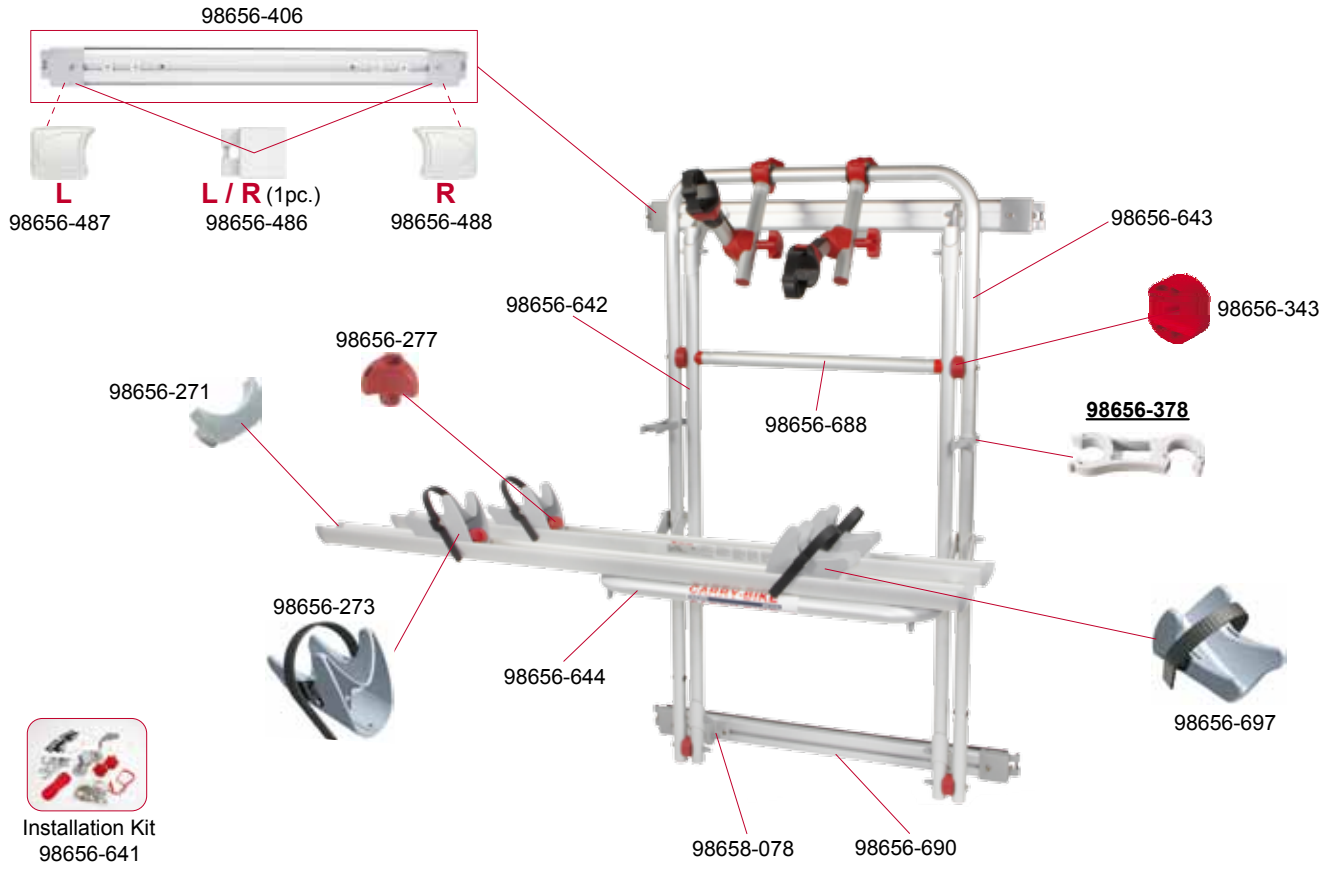

CARRY-BIKE® 200 DJ FIAT DUCATO > 06/2006

02093A89-

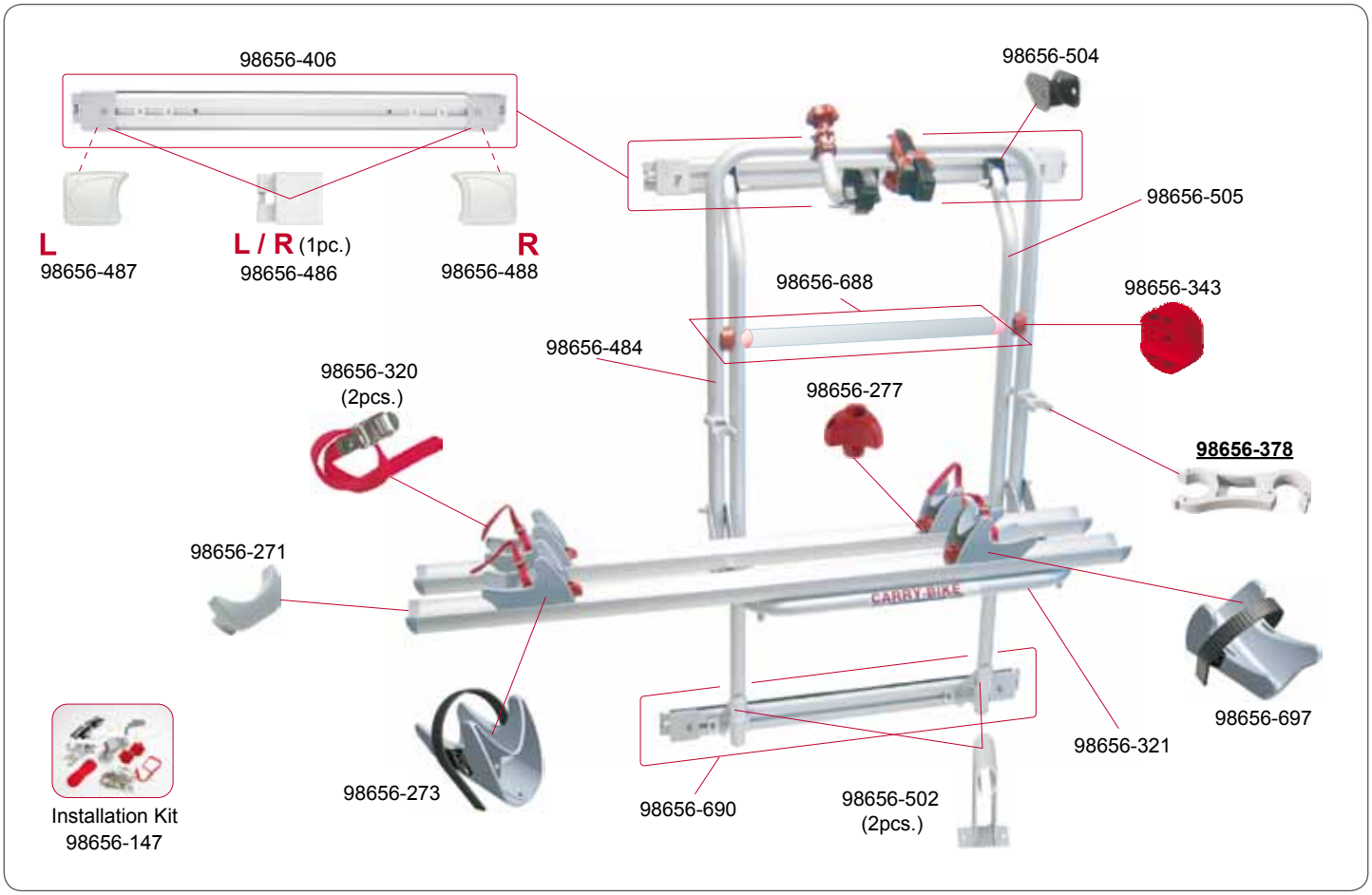

CARRY-BIKE® 200 DJ FIAT DUCATO > 06/2006

02093-89-

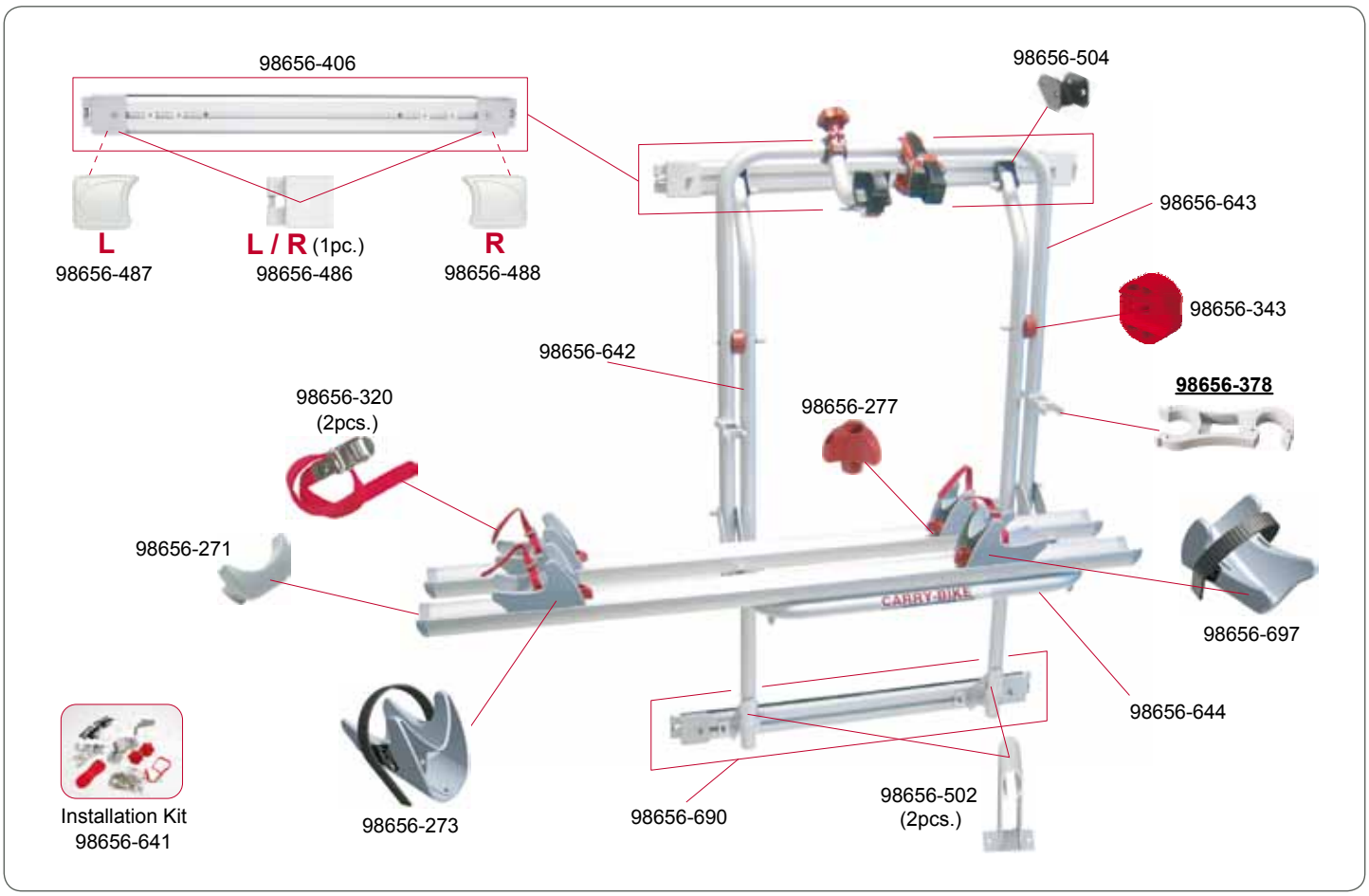

CARRY-BIKE® 200 DJ FIAT DUCATO < 06/2006

02093-65-

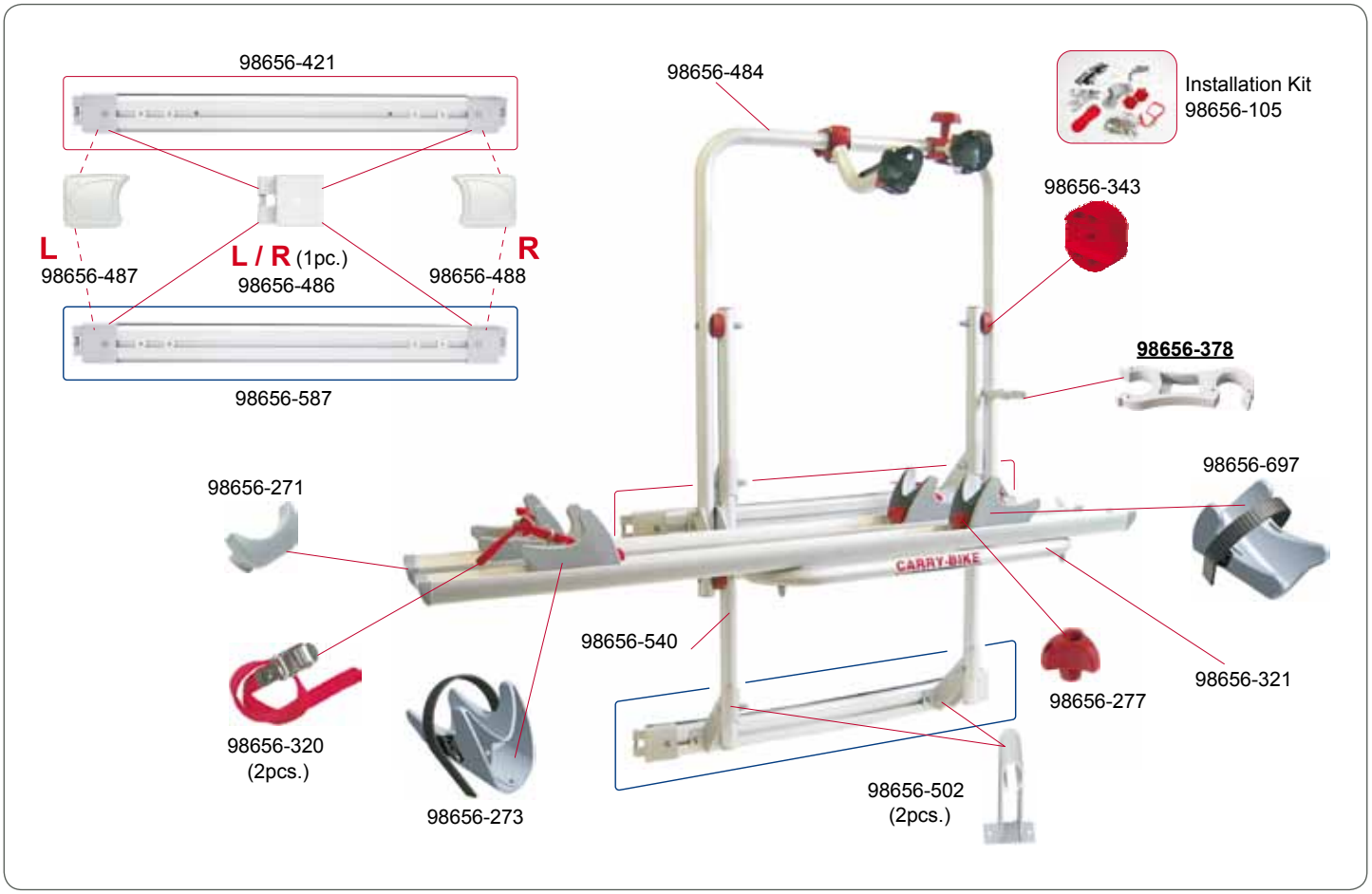

CARRY-BIKE® 200 DJ SPRINTER / CRAFTER

02093-93-

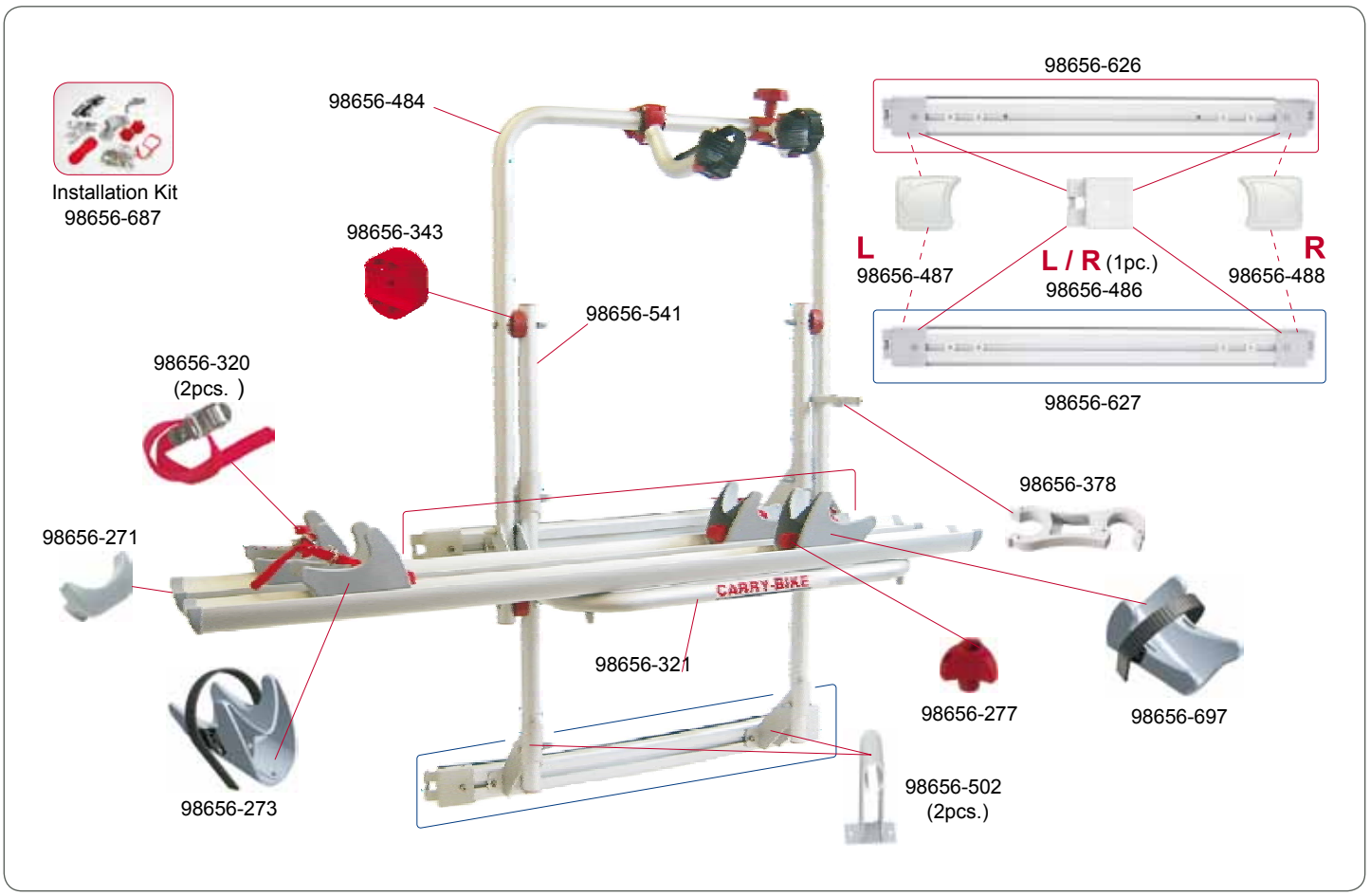

CARRY-BIKE® 200 DJ RENAULT MASTER

02093A88-

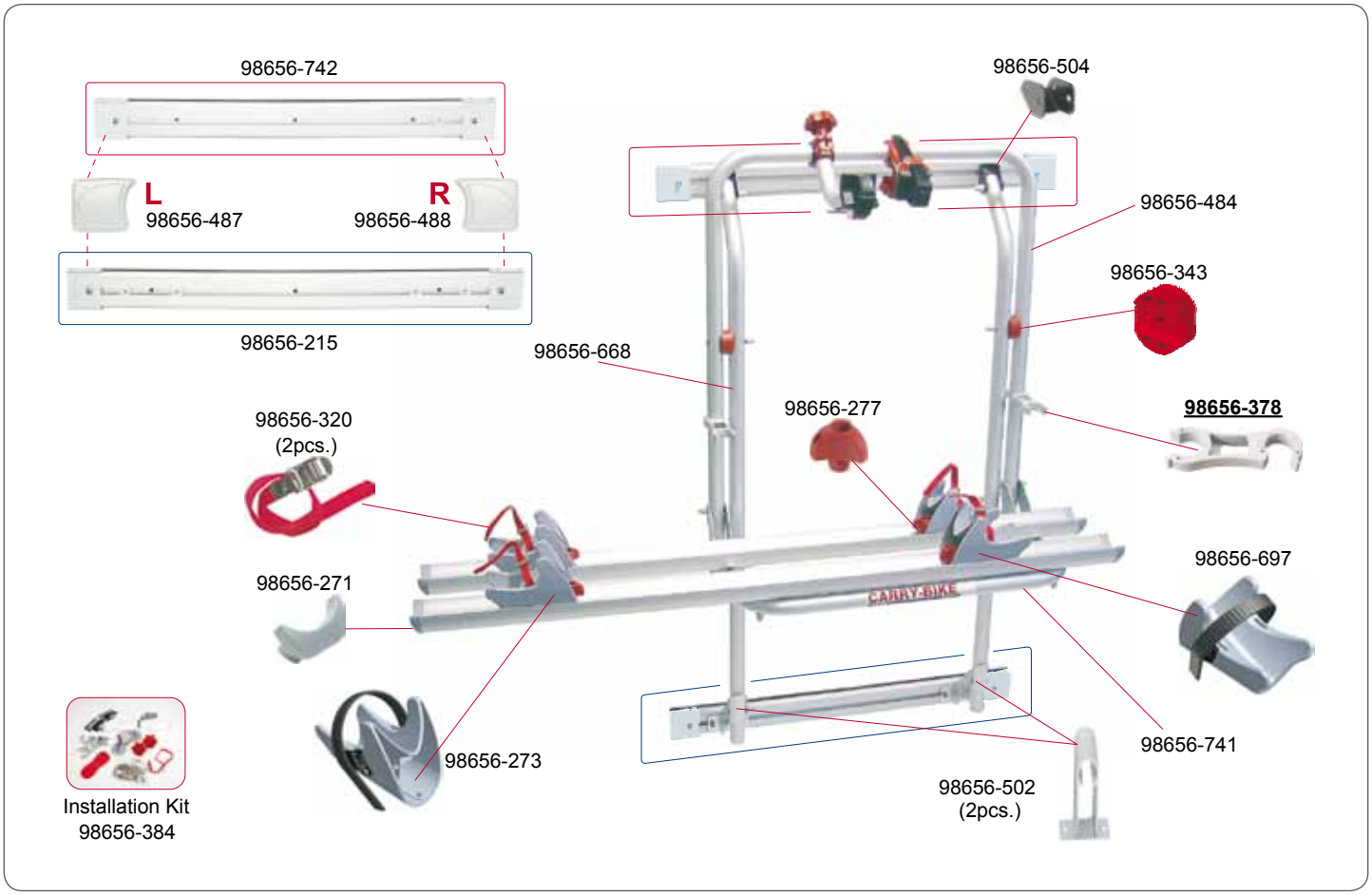

CARRY-BIKE® 200 DJ RENAULT MASTER D

02093-88-

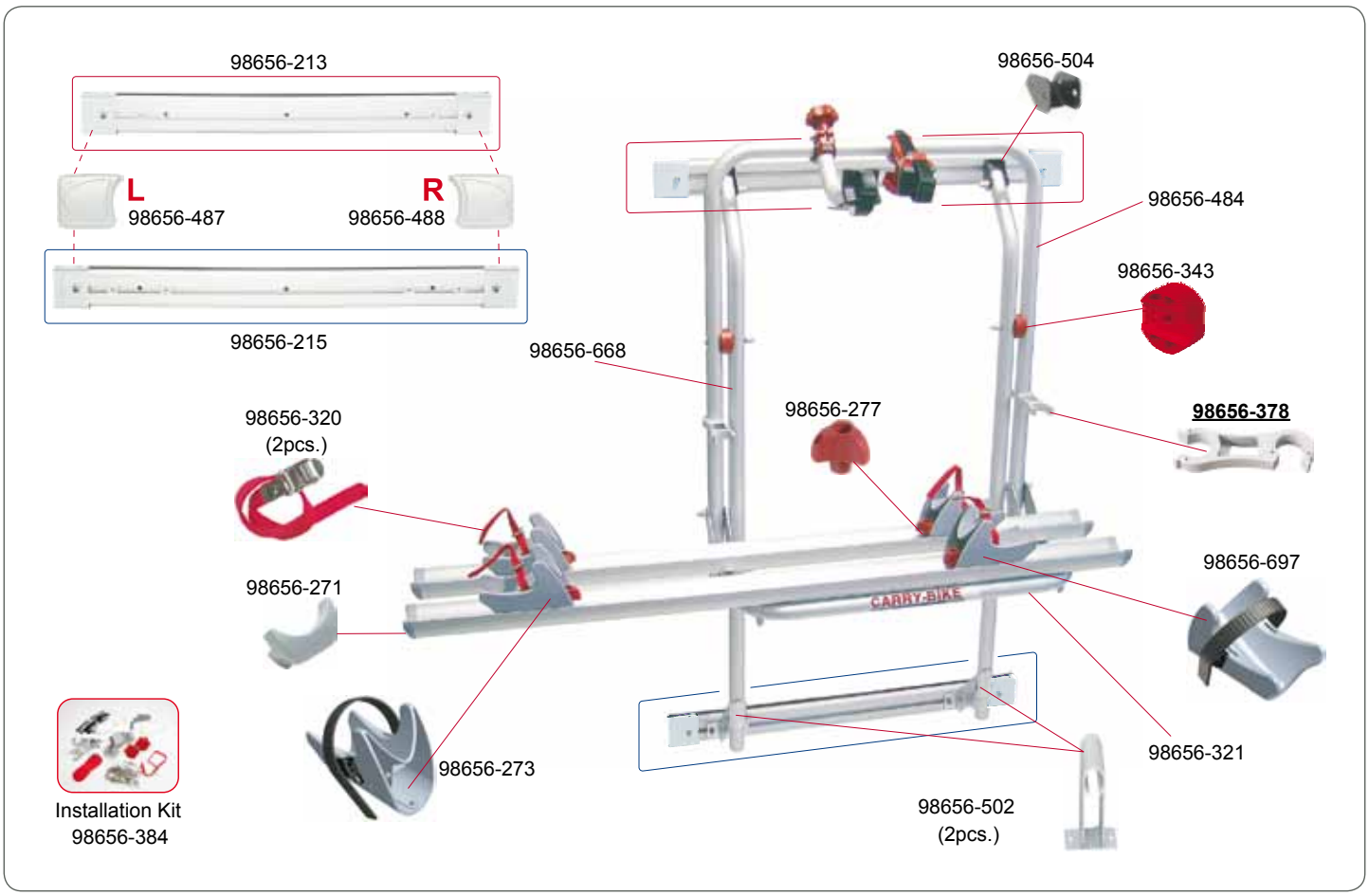

CARRY-BIKE® 200 D

02093-15-

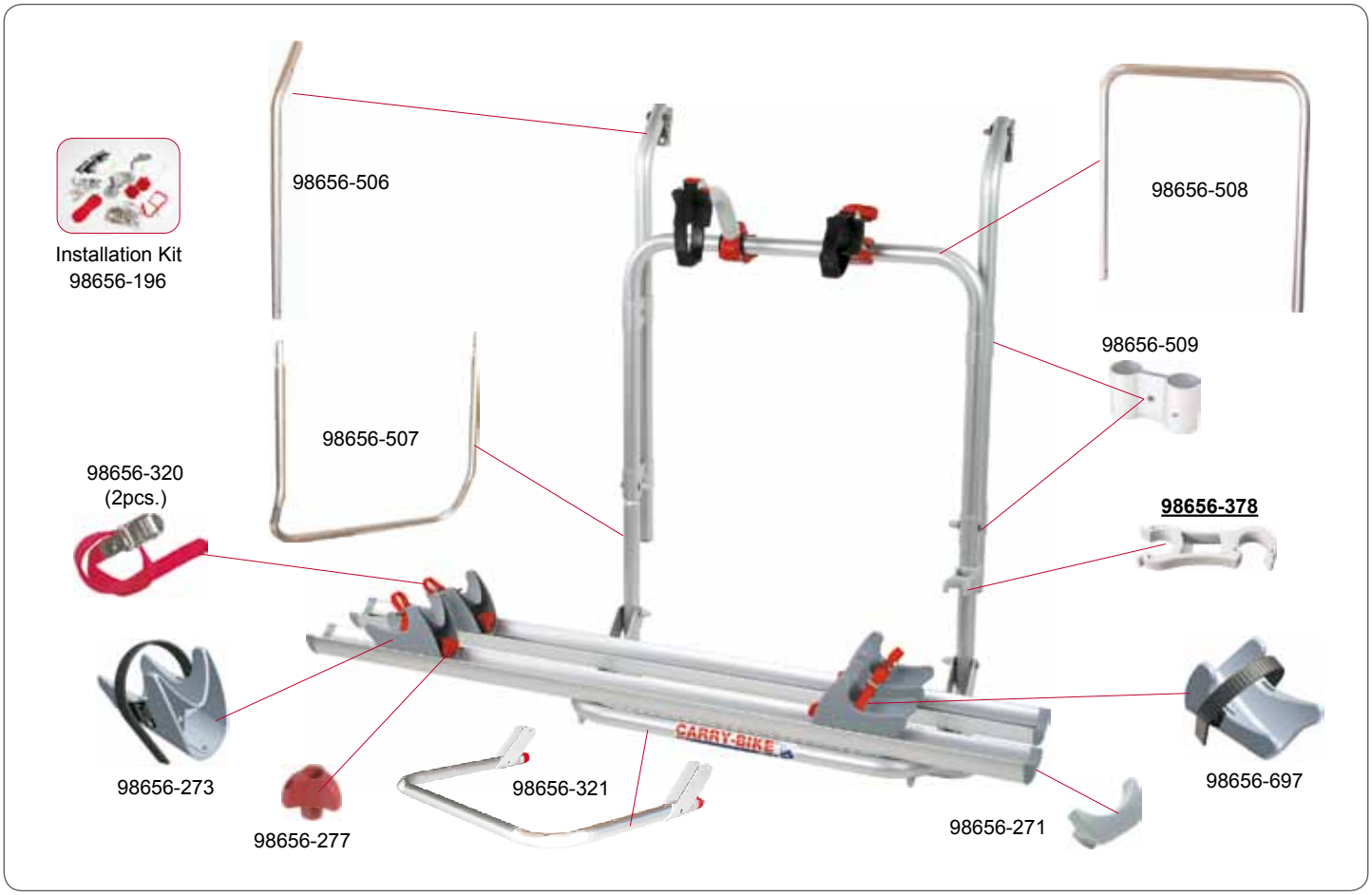

CARRY-BIKE® 200 DB

02093-25-

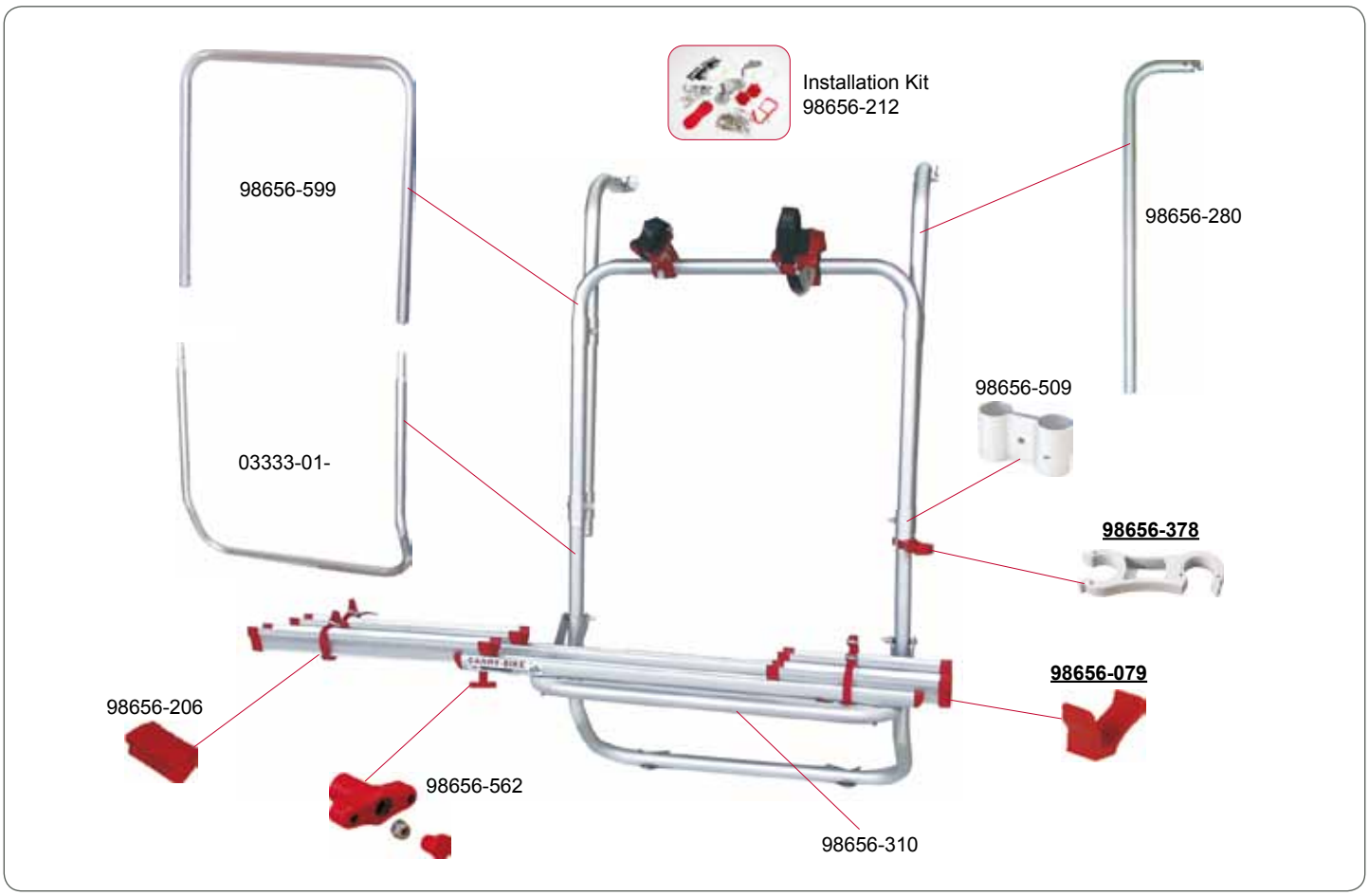

CARRY-BIKE® MERCEDES VIANO

02093-75-

CARRY-BIKE® MERCEDES VITO

02093-05-

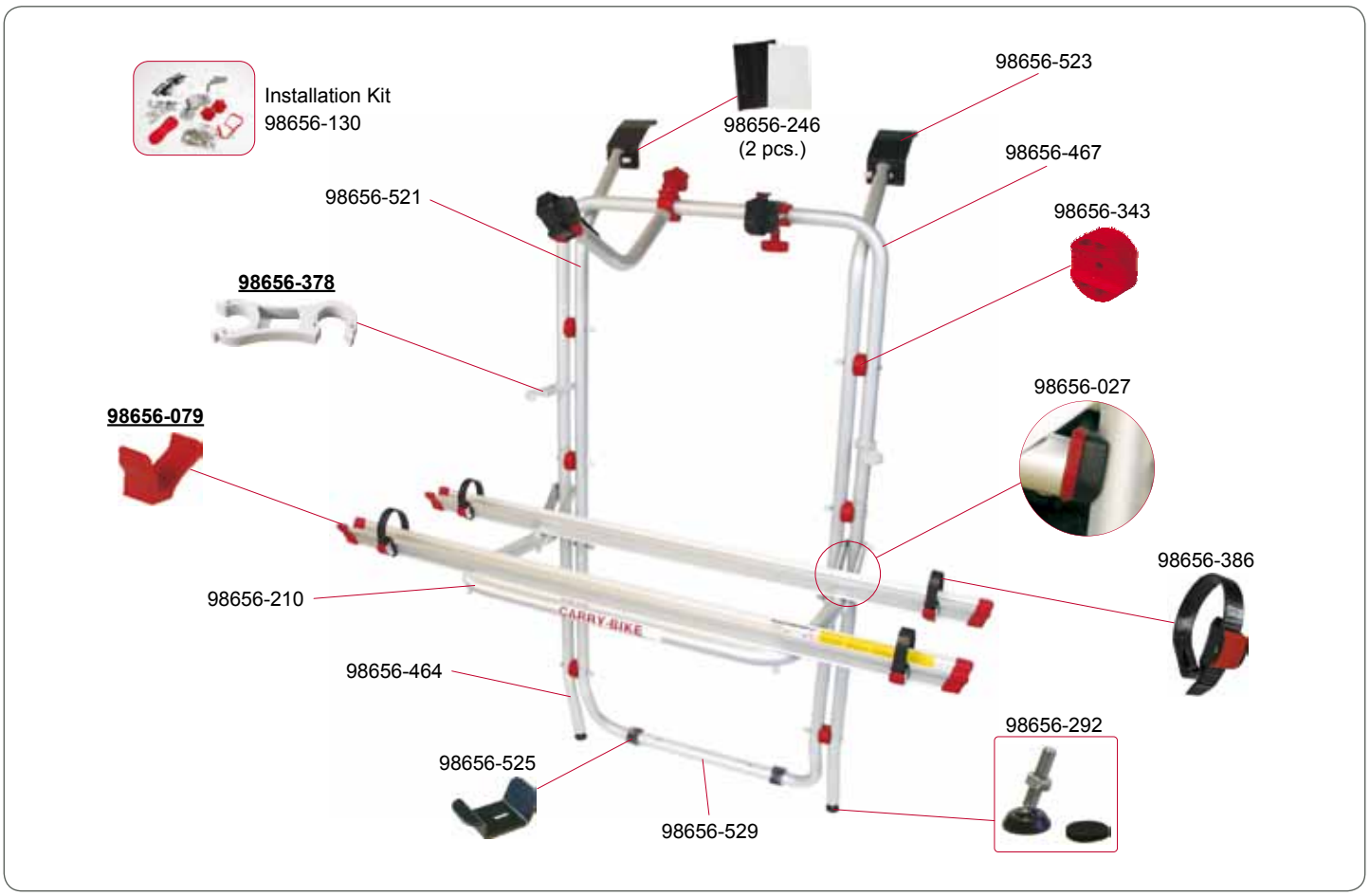

CARRY-BIKE® VIVARO / TRAFIC

02093-72-

CARRY-BIKE® RENAULT TRAFIC D

02093-74-

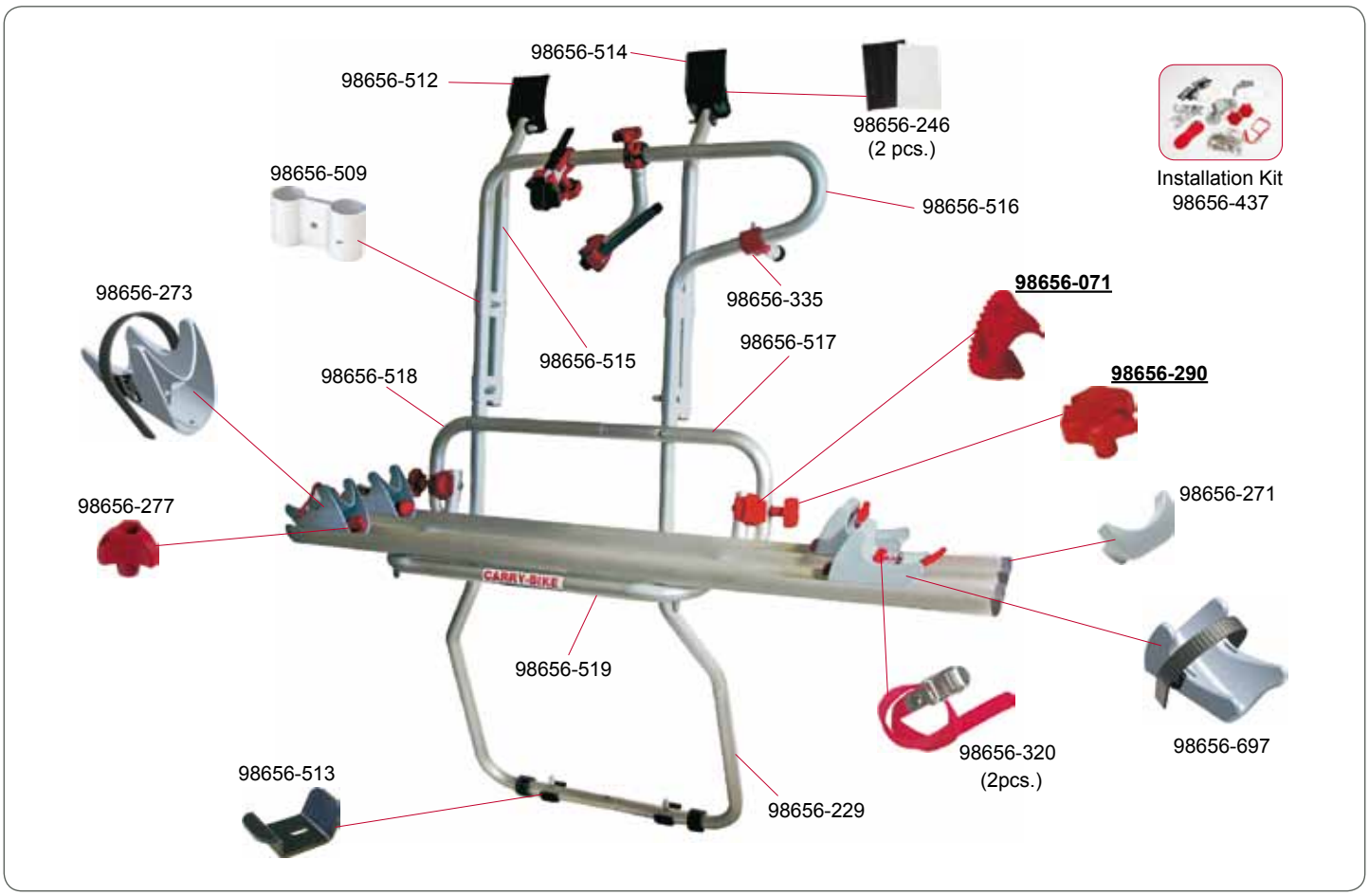

CARRY-BIKE® RENAULT TRAFIC DL HIGH ROOF 02093-73-

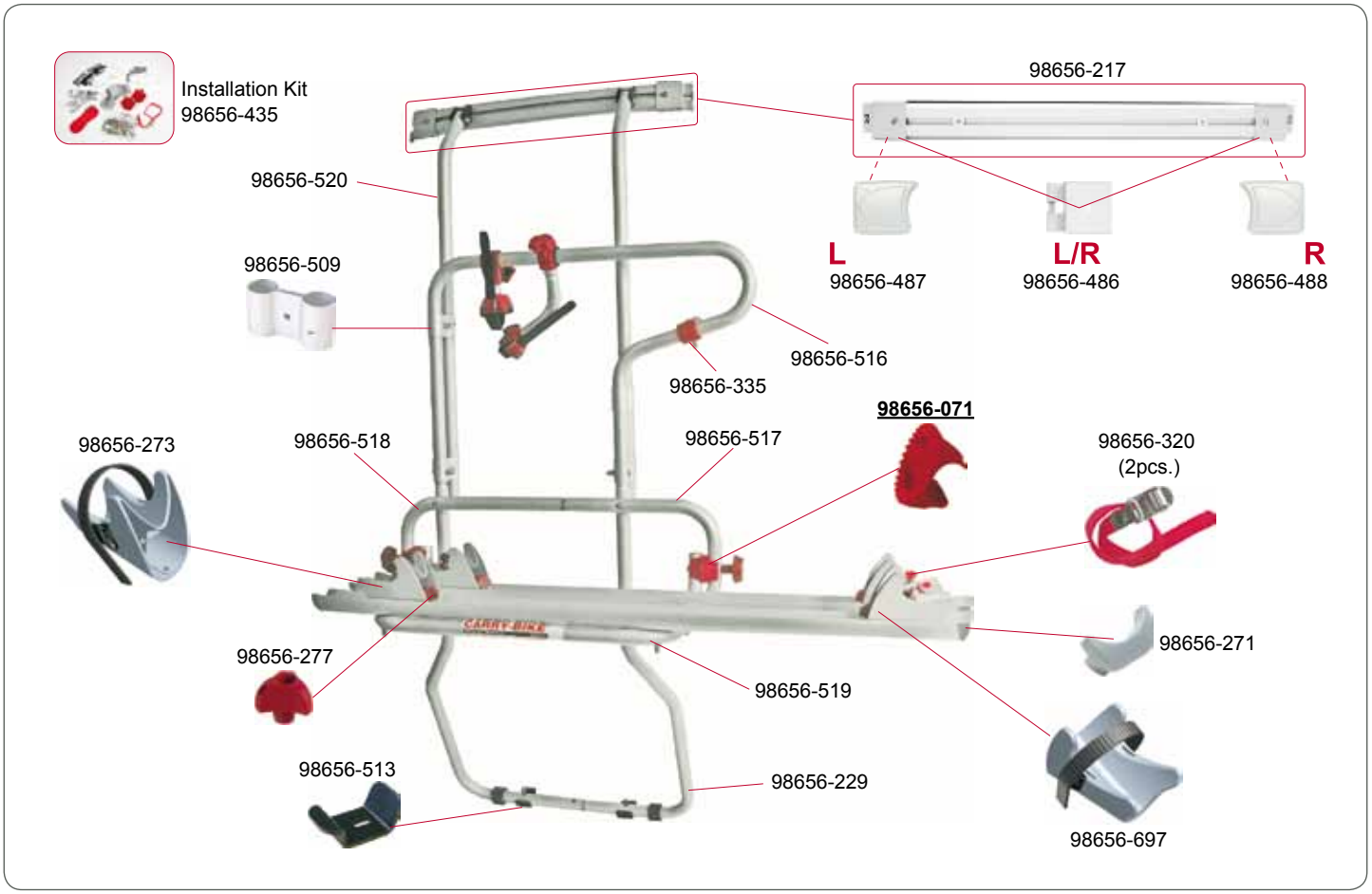

CARRY-BIKE® FORD TRANSIT 2000 02093-60-

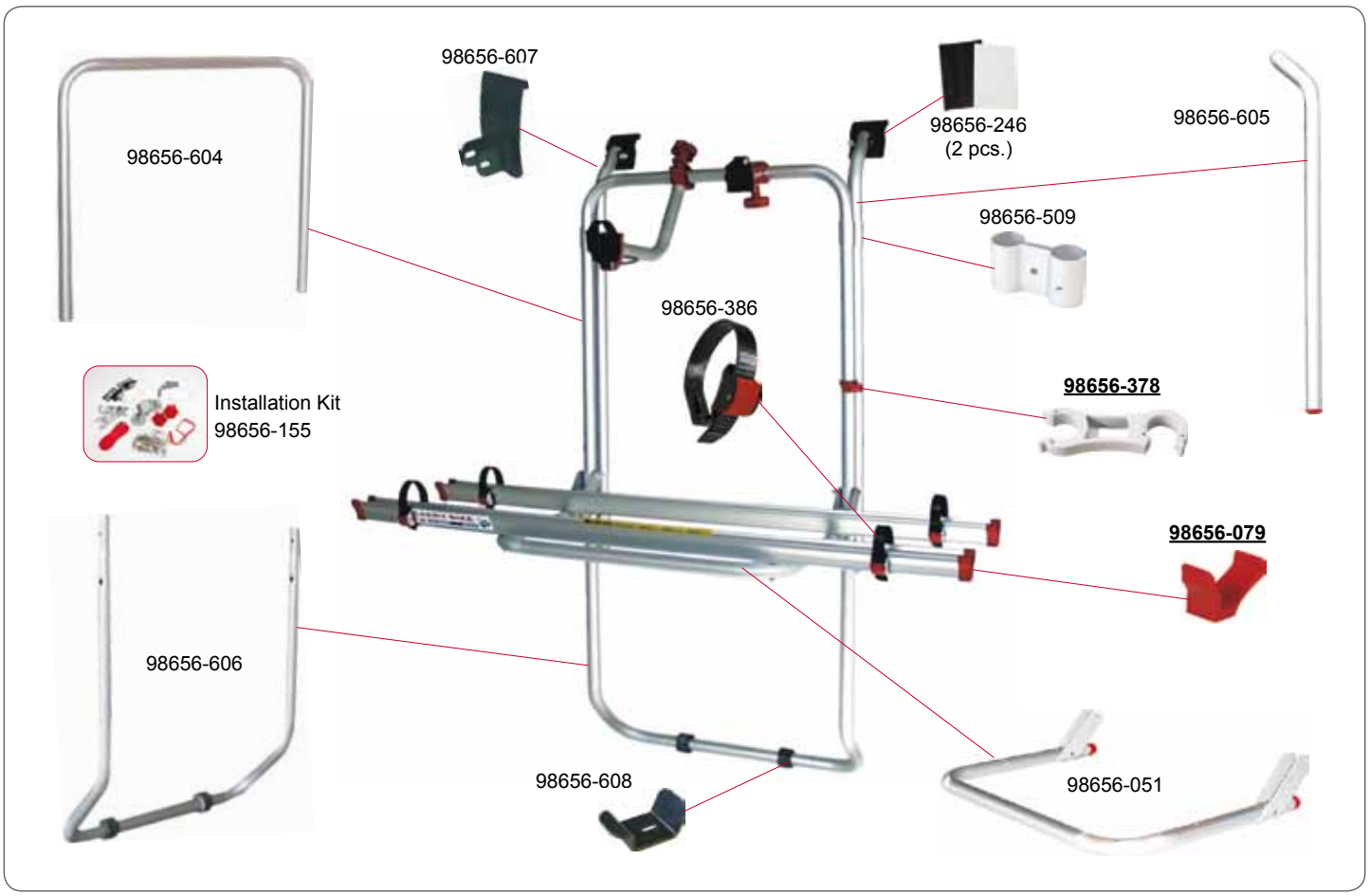

CARRY-BIKE® FORD TRANSIT

02093M01-

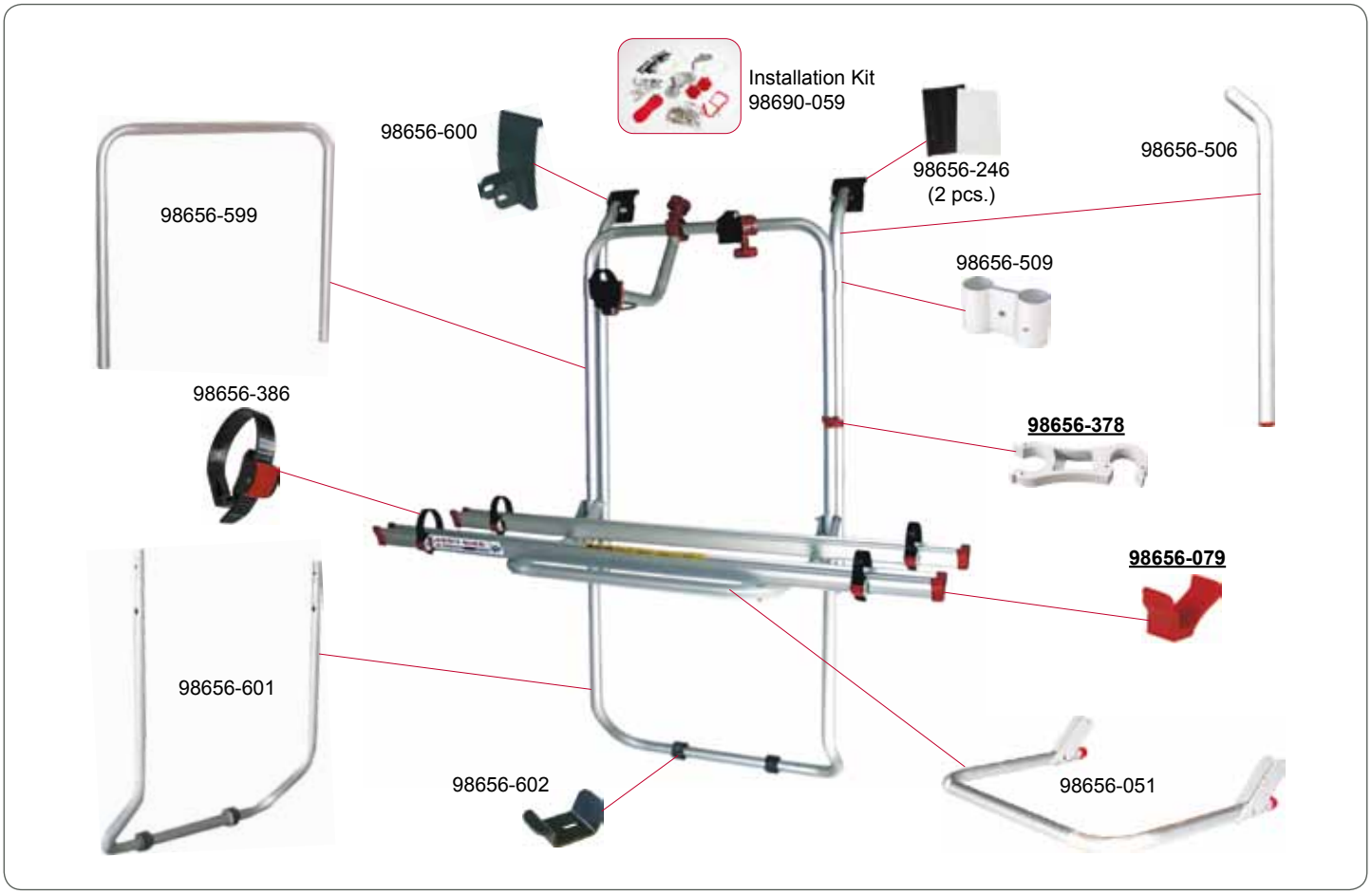

CARRY-BIKE® BACKPACK

02093A38-

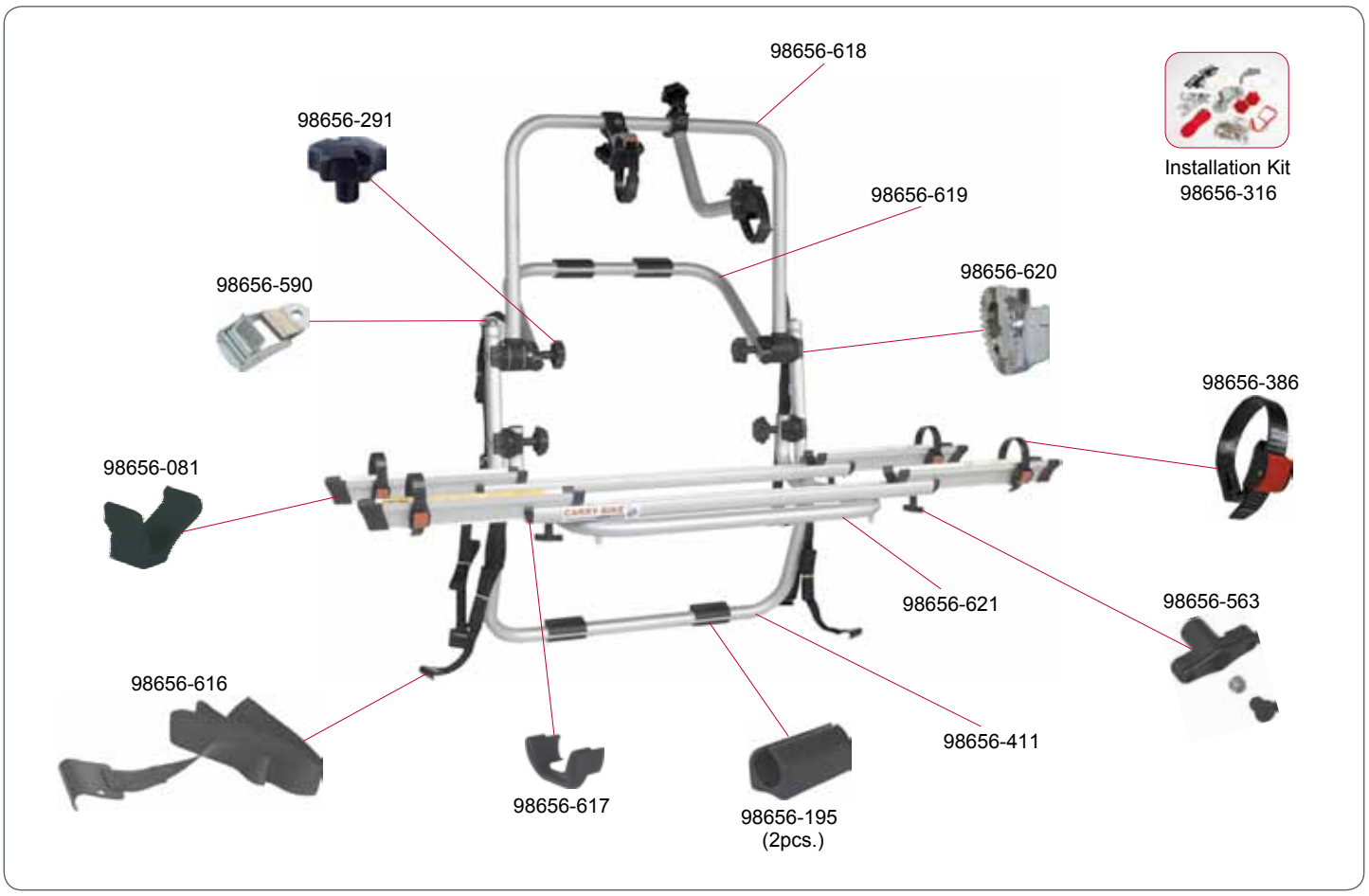

CARRY-BIKE® BACKPACK 4X4

02093B38-

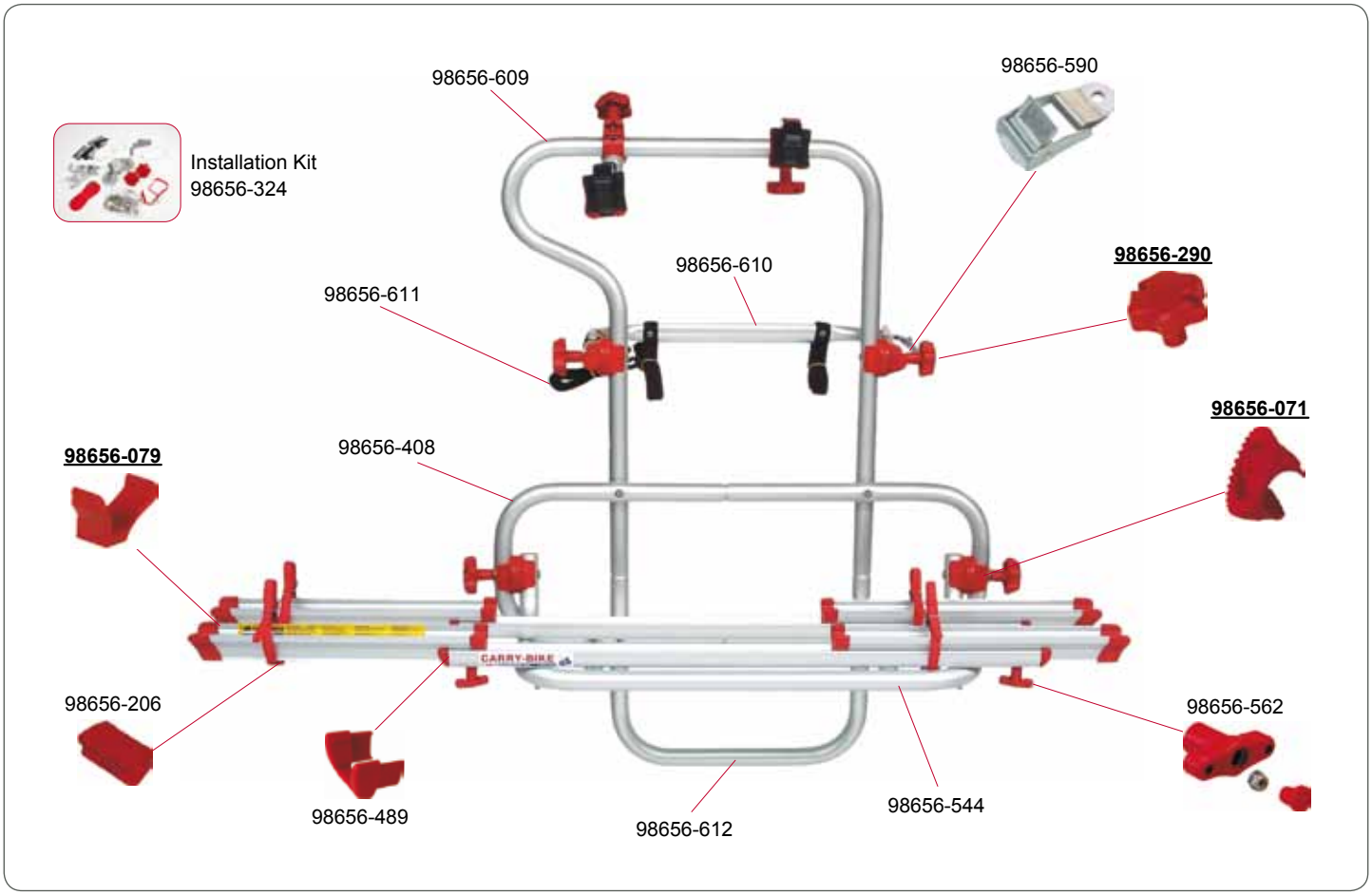

CARRY-BIKE® 4X4

02093N01-

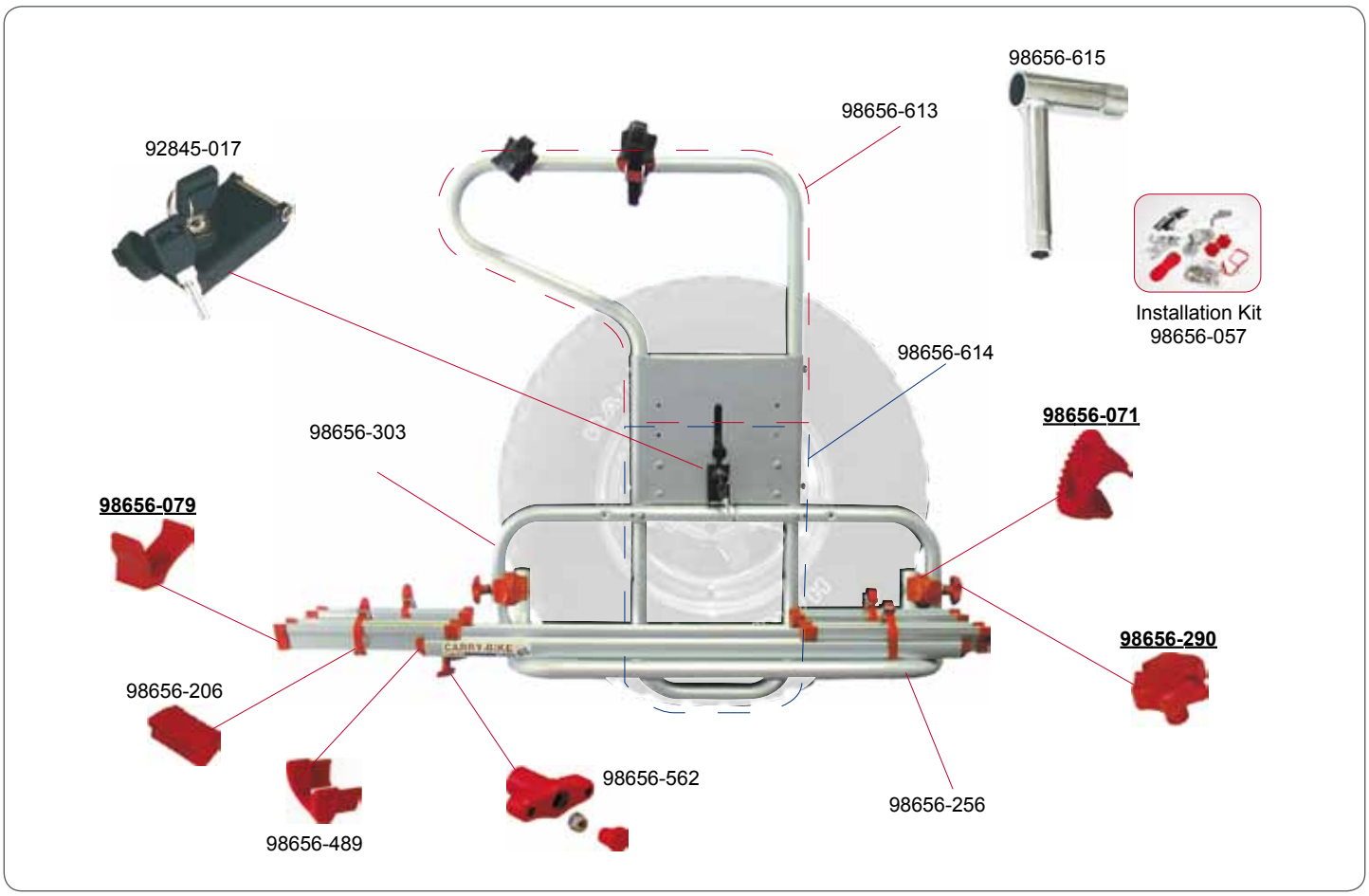

CARRY-BIKE® GARAGE STANDARD

02093-54-

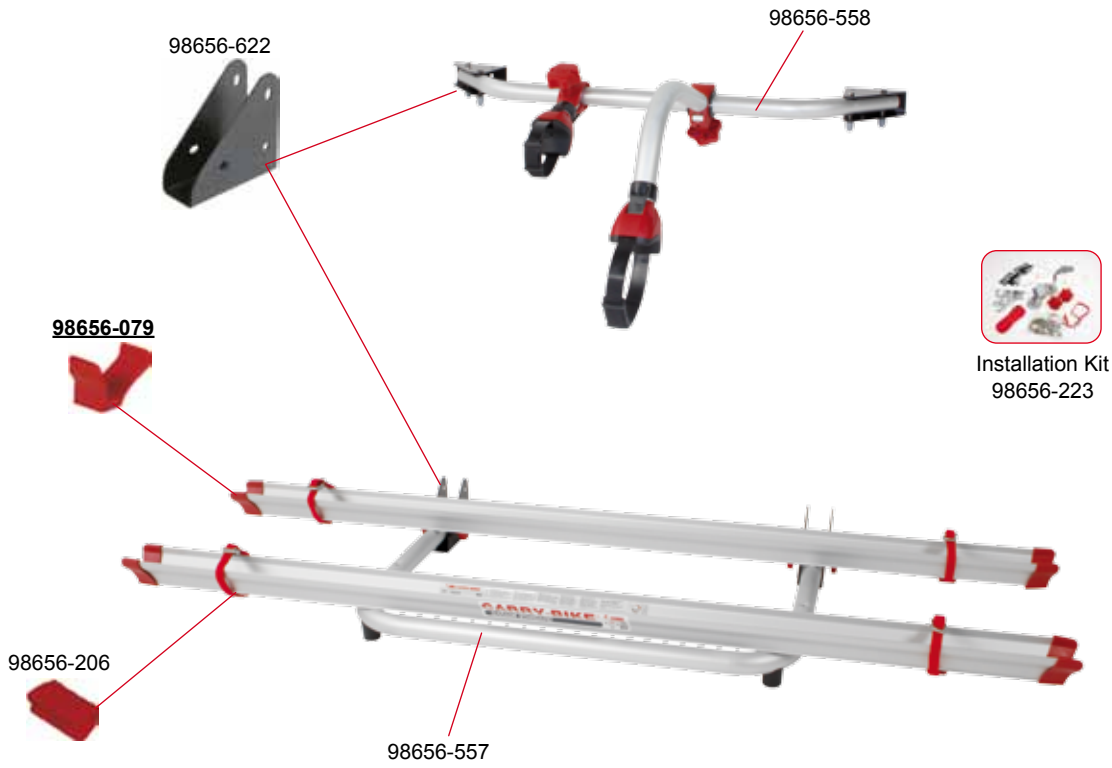

CARRY-BIKE® GARAGE PLUS

02093-78-

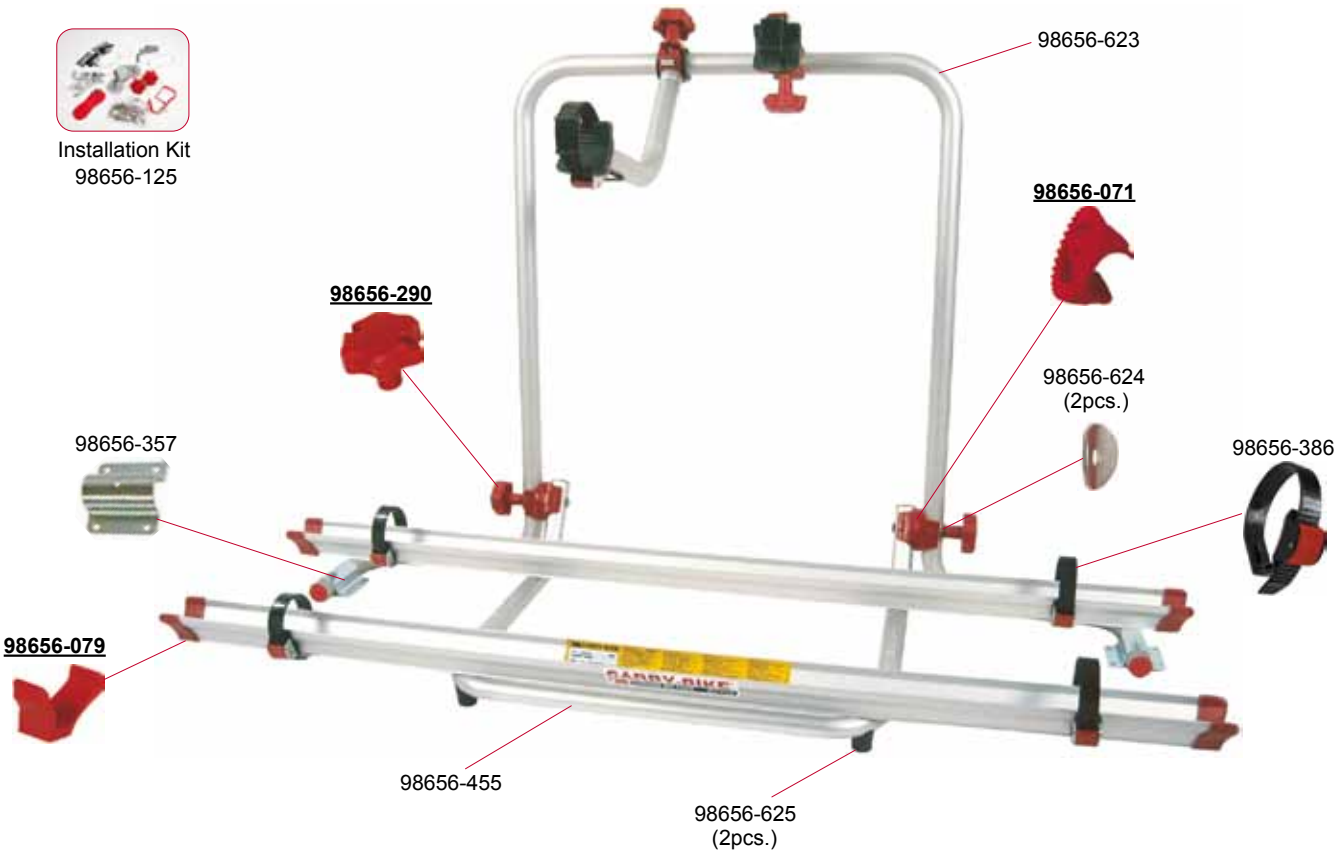

CARRY-BIKE® GARAGE SLIDE PRO BIKE 04822-04-

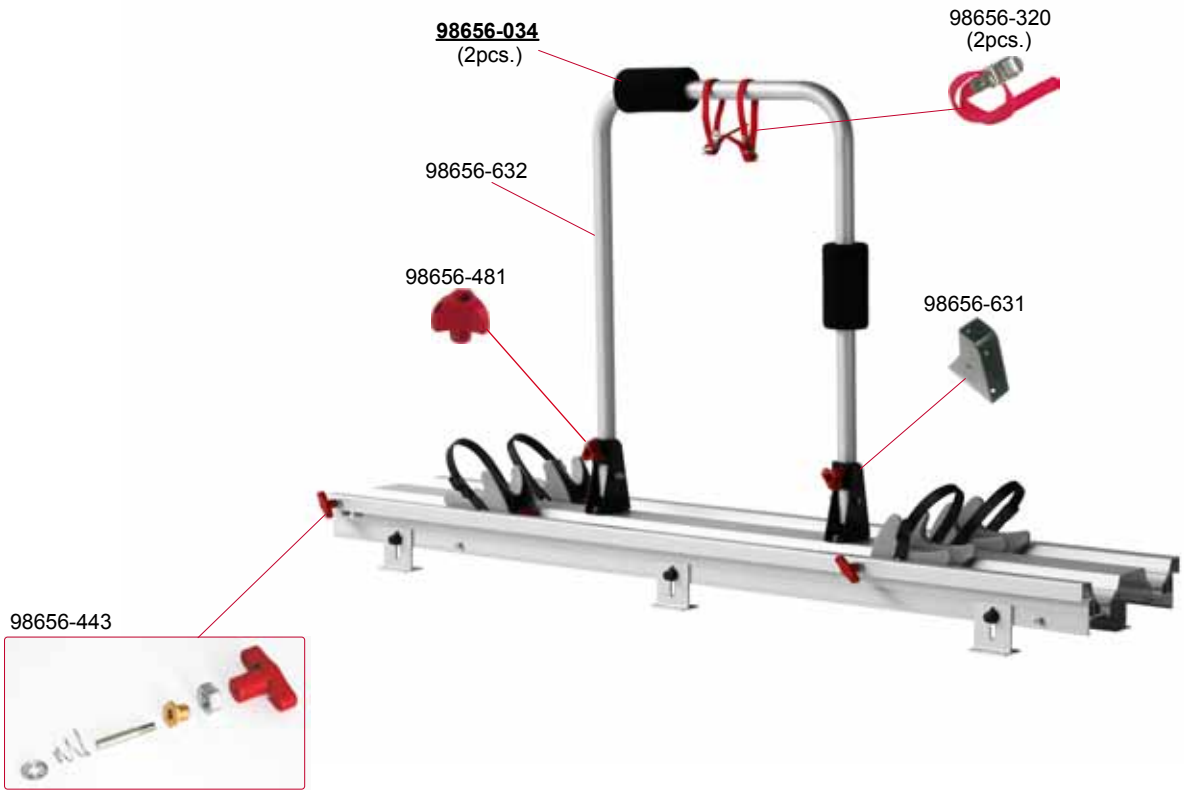

CARRY-BIKE® GARAGE SLIDE / KIT BIKE SLIDE 04822-02- / 98656-370

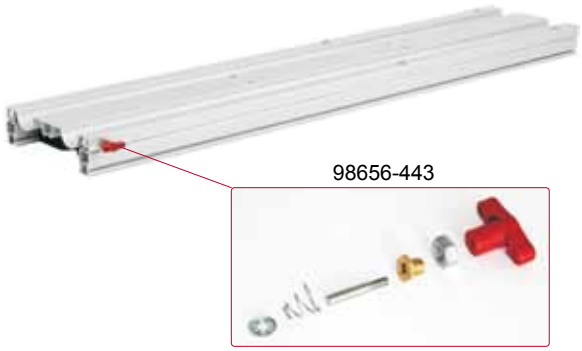

CARRY-BIKE® ACCESSORIES

BIKE-BLOCK PRO 04133(X)

98656-664 UPPER

KIT PLATE XL

98656-275

KIT COVERS RAIL SUPPORT BASE

98656-769
(4 pcs.)

98656-290 **98656-293** 98656-585 98656-291

98656-665 LOWER

98656-672
(10 pcs.)
M5

98656-671
(10 pcs.)
M6

RAIL QUICK C

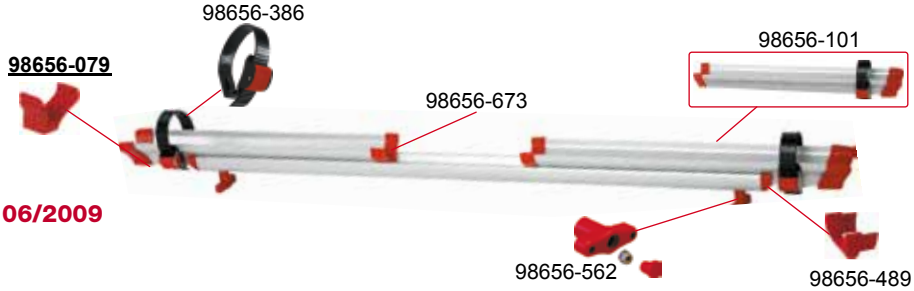

CARRY-BIKE VW T4
CARRY-BIKE 200 DJ Ducato < 06/2009
CARRY-BIKE VW T5
CARRY-BIKE 200 D
CARRY-BIKE 200 Trafic DS Standard Roof
CARRY-BIKE 200 Trafic DL Standard Roof

CARRY-BIKE® KIT BLUE / GREY / BLACK PRO / PRO C

PRO BLUE
98656-766

PRO C BLUE
98656-767

PRO GREY
98656-782

PRO C GREY
98656-783

PRO BLACK
98656-788

PRO C BLACK
98656-790

BIKE-BLOCK PRO 1 BLUE
04133-01B

BIKE-BLOCK PRO 1 GREY
04133-01G

BIKE-BLOCK PRO 1 BLACK
04133-01A

BIKE-BLOCK PRO 2 BLUE
04133A01B

BIKE-BLOCK PRO 2 GREY
04133A01G

BIKE-BLOCK PRO 2 BLACK
04133A01A

BIKE-BLOCK PRO 3 BLUE
04133B01B

BIKE-BLOCK PRO 3 GREY
04133B01G

BIKE-BLOCK PRO 3 BLACK
04133B01A

BIKE-BLOCK PRO 4 BLUE
04133C01B

BIKE-BLOCK PRO 4 GREY
04133C01G

BIKE-BLOCK PRO 4 BLACK
04133C01A

CARRY-BIKE® INSTALLATION KIT

98656-588
M6x50mm

98656-409
M6x55mm

CARRY-BIKE PRO
CARRY-BIKE PRO C
CARRY-BIKE TRIGANO
CARRY-BIKE CL
CARRY-BIKE UL
CARRY-BIKE L80
CARRY-BIKE PLUS
CARRY-BIKE PLUS C
CARRY-BIKE FLEURETTE

CARRY-BIKE PRO
CARRY-BIKE PRO C
CARRY-BIKE HYMER
CARRY-BIKE TRIGANO
CARRY-BIKE PRO C KNAUS
CARRY-BIKE L80

CARRY-BIKE CL < 10-2007
CARRY-BIKE UL < 10-2007
CARRY-BIKE PRO PREMIUM
CARRY-BIKE PRO C PREMIUM
CARRY-BIKE PRO DELUXE
CARRY-BIKE PRO C DELUXE
CARRY-BIKE FLEURETTE

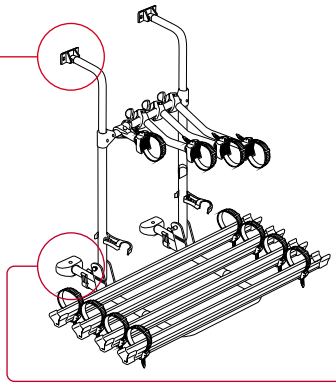

98656-005
M6x50mm

98656-220
M6x65mm

98656-400
M6x55mm

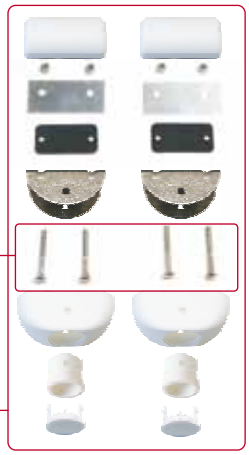

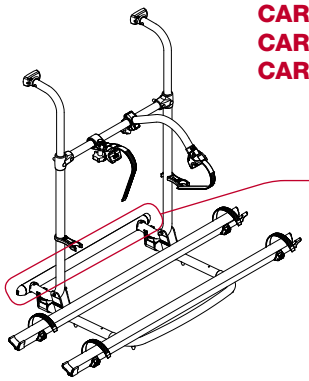

CARRY-BIKE PRO
CARRY-BIKE PRO C
CARRY-BIKE PREMIUM S
CARRY-BIKE PREMIIUM SC

98656-639

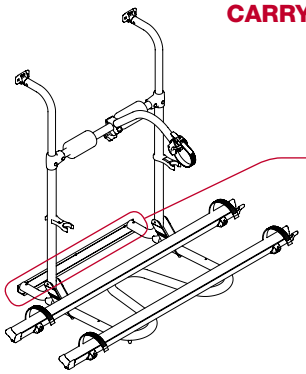

CARRY-BIKE CL 2008
CARRY-BIKE UL 2008

98656-456

CARRY-BIKE 200 D

98655-033

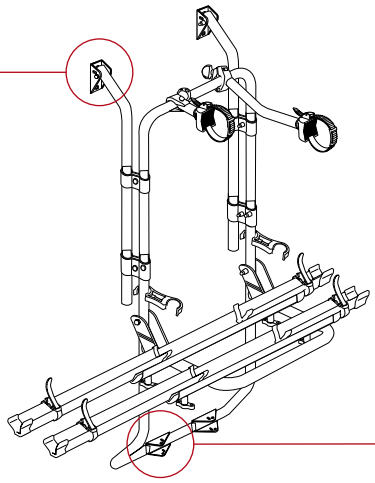

98656-006

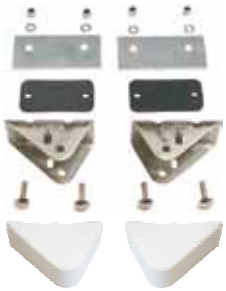

CARRY-BIKE 200 DB

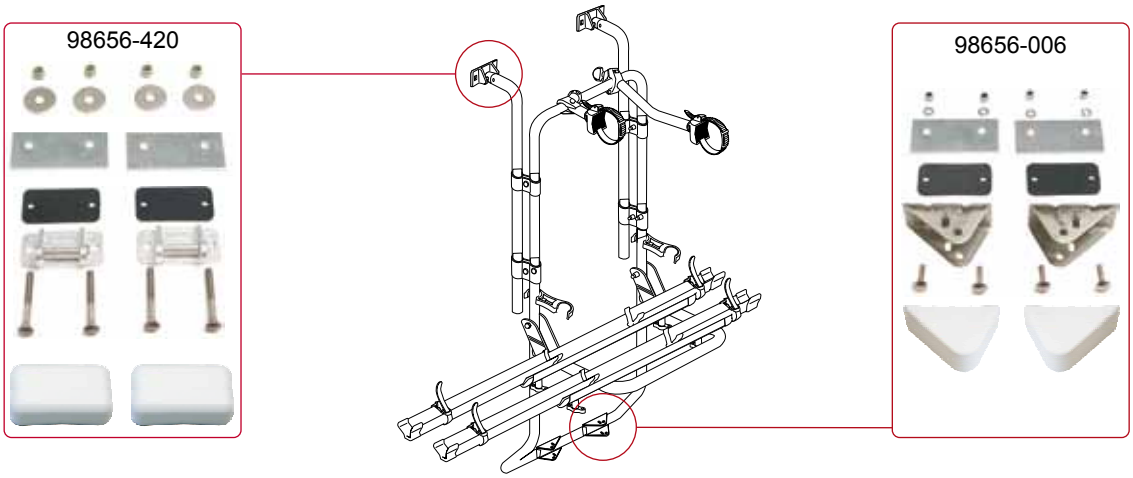

CARRY-BIKE LIFT 77

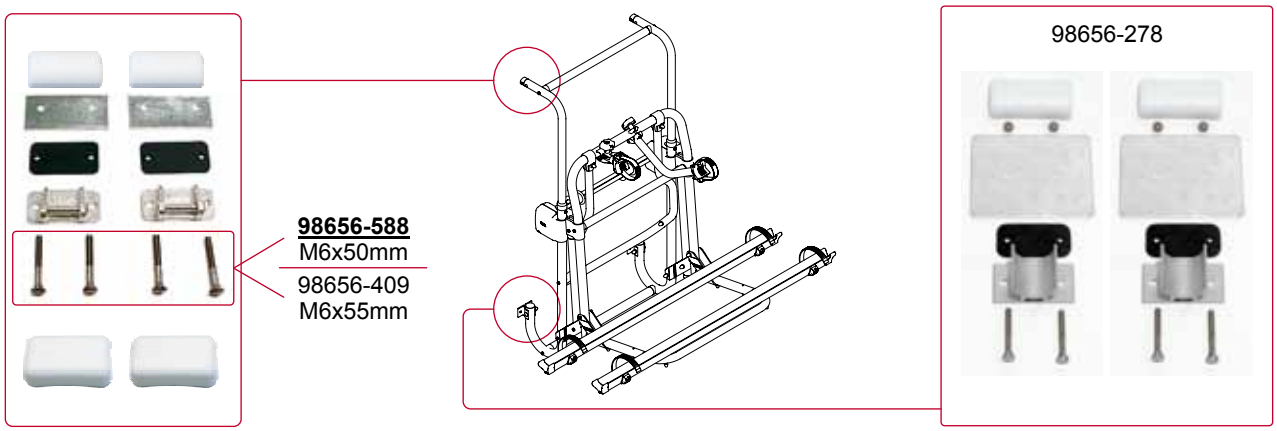

CARRY-BIKE SE

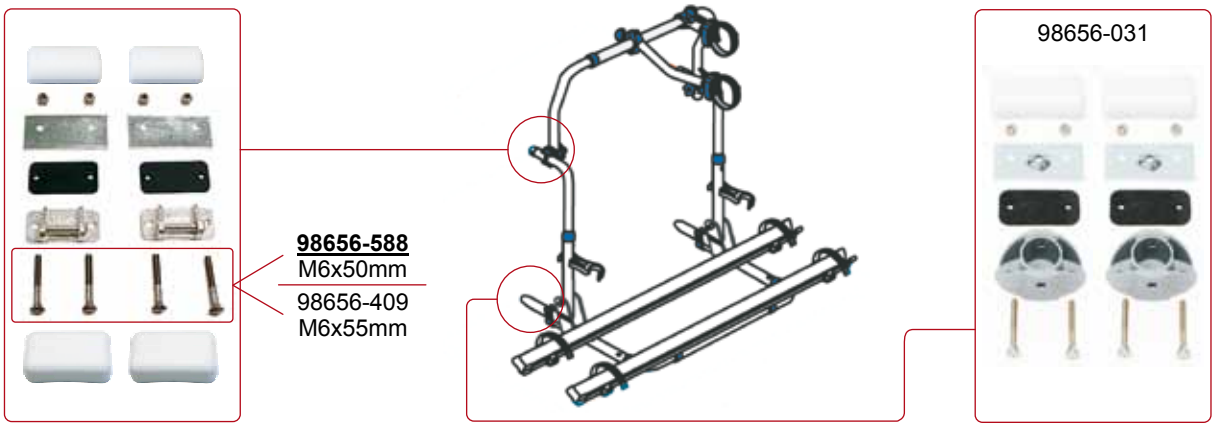

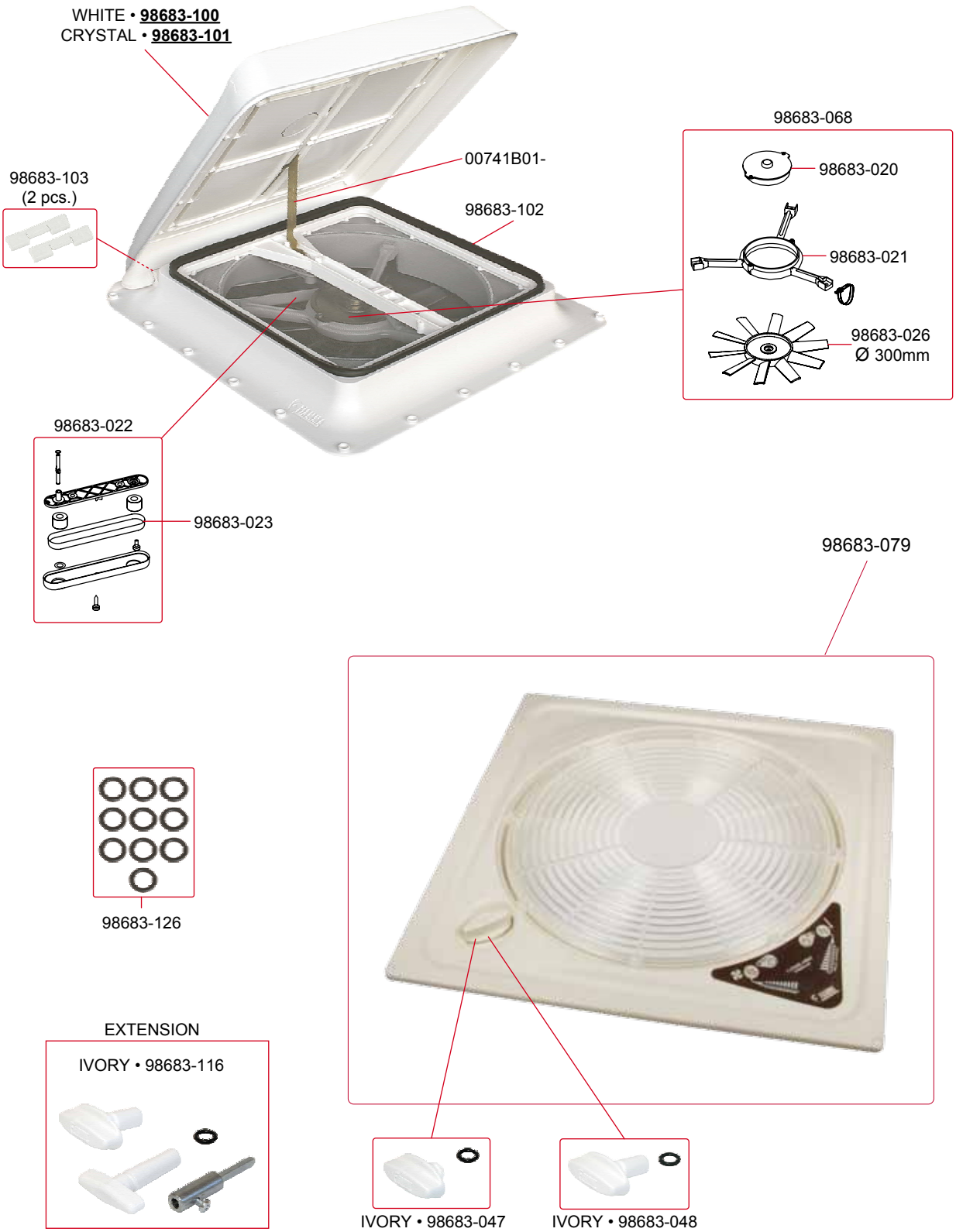
WHITE • 98683-100
CRYSTAL • 98683-101
98683-103
(2 pcs.)
00741B01-
98683-102
98683-068
98683-020
98683-021
98683-026
Ø 300mm
98683-022
98683-023
98683-079
98683-126
EXTENSION
IVORY • 98683-116
IVORY • 98683-047
IVORY • 98683-048

TURBO-VENT WHITE / CRYSTAL
TURBO-VENT P3 WHITE / CRYSTAL

03623F01- / 03623F01B
03623G01- / 03623G01B

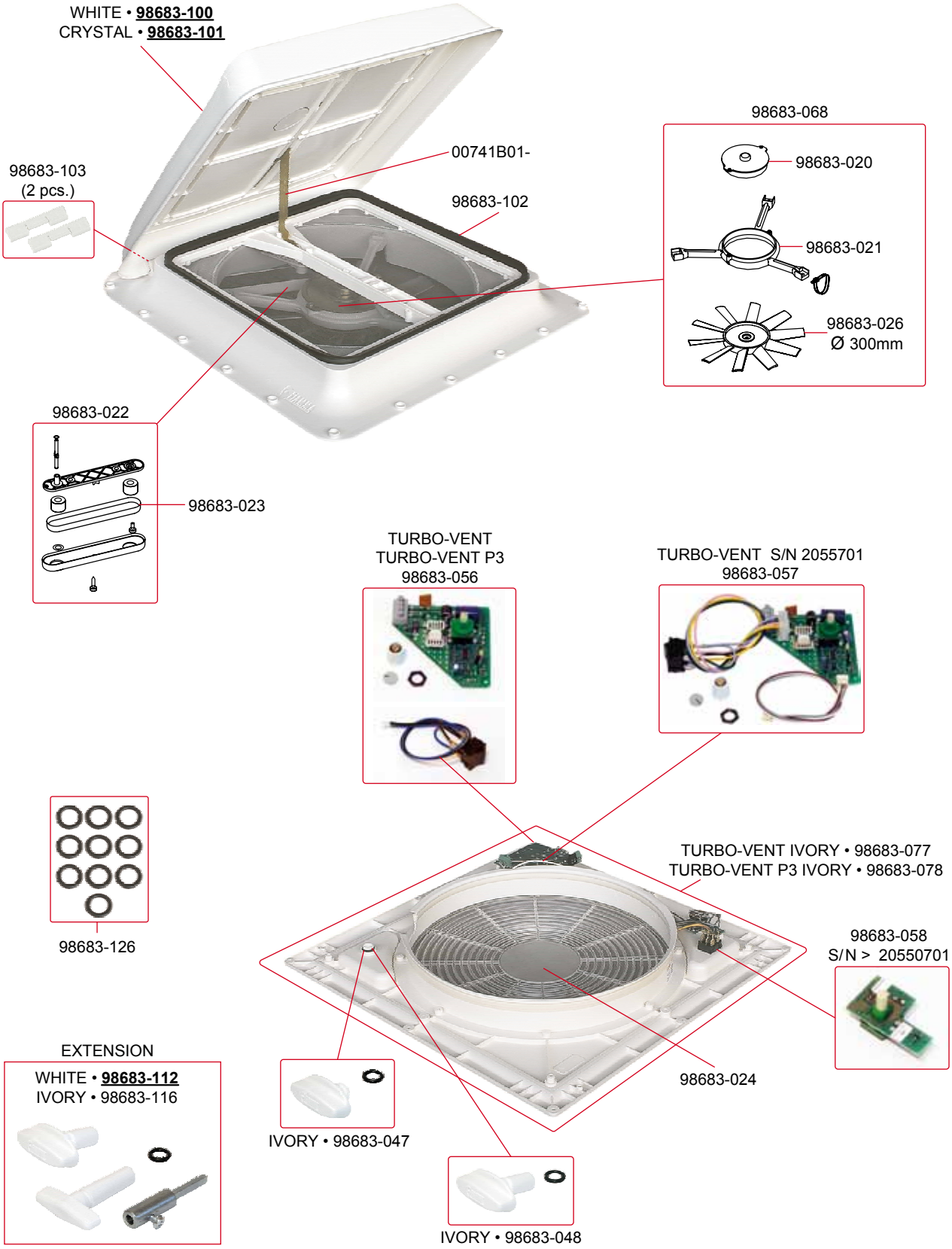

TURBO-VENT PRO

03622-01-

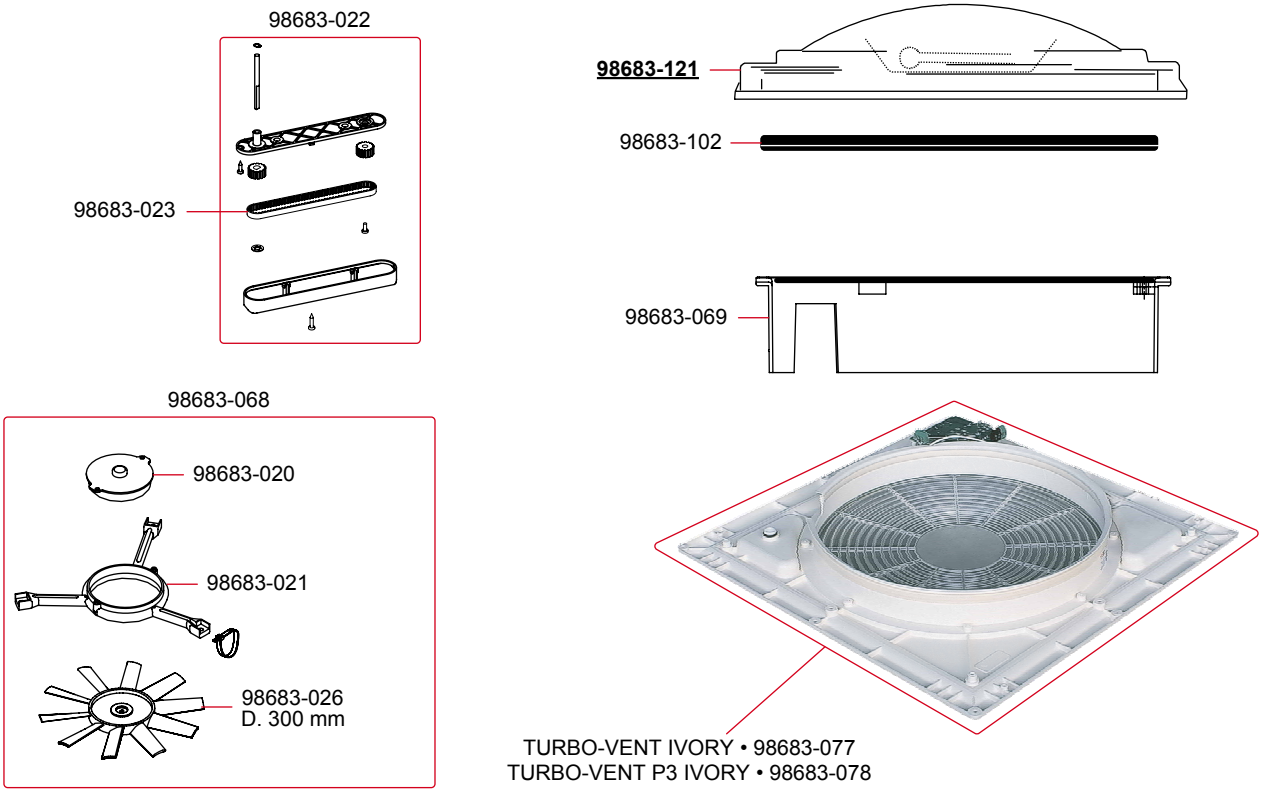

VENT WHITE / IVORY

04328B01- / 04328B01D

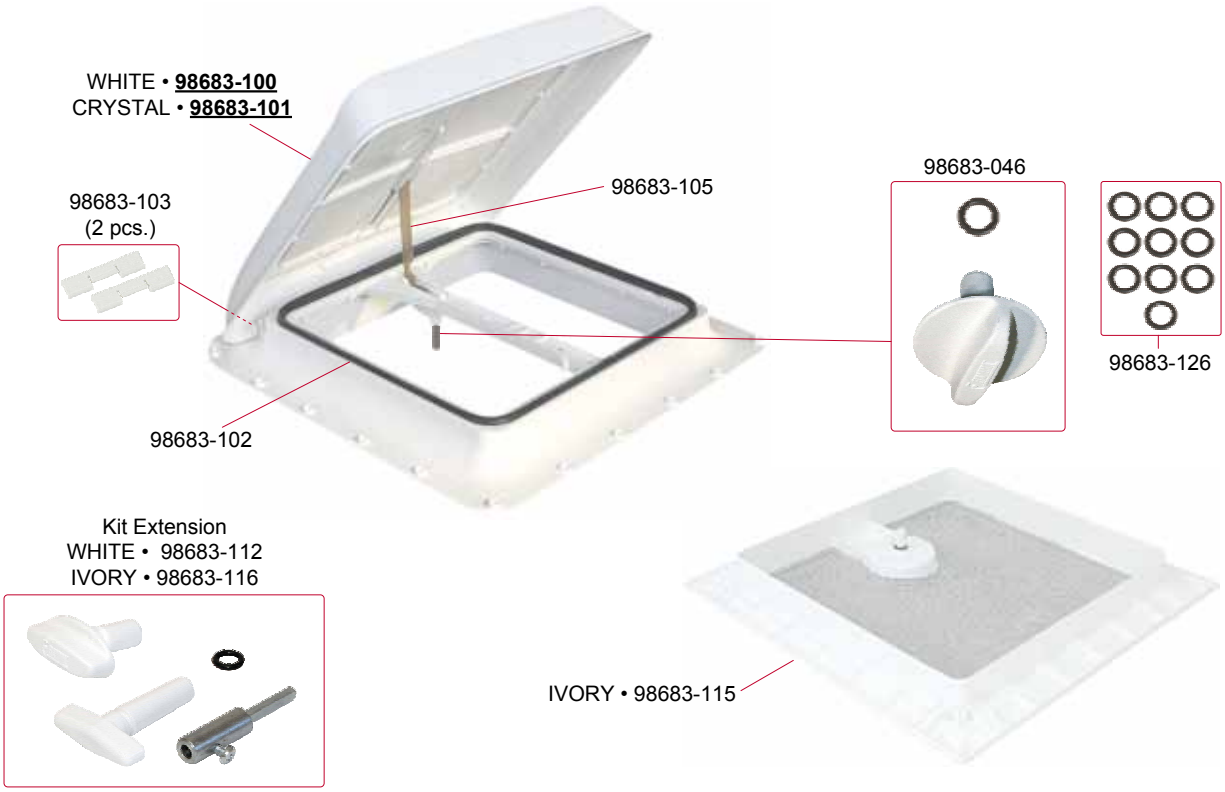

VENT® 40X40 WHITE / FUME' / CRYSTAL 01305-01- / 01305A01A / 01305A01B

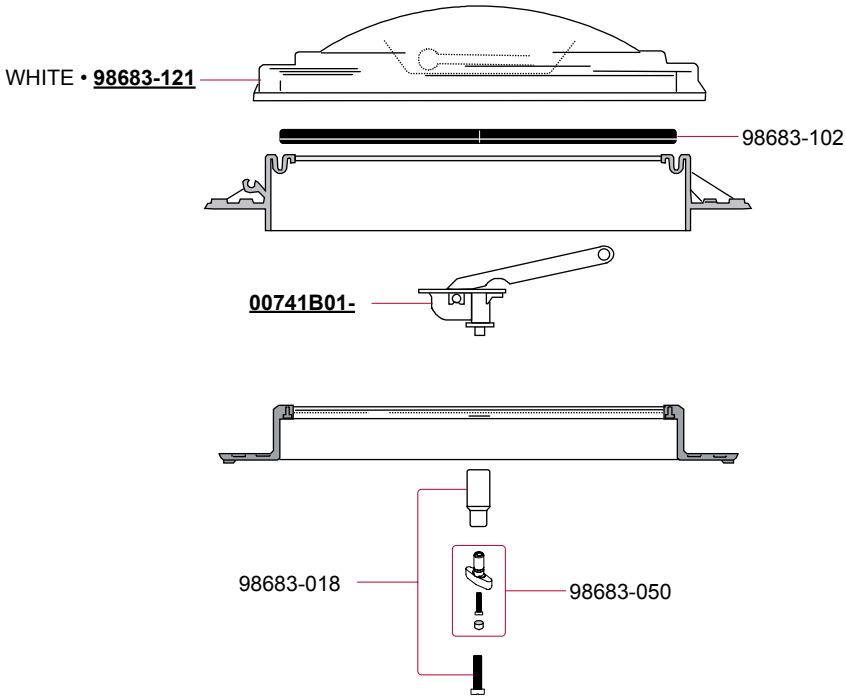

VENT® 28 WHITE / CRYSTAL
TURBO 28 WHITE / CRYSTAL

04918-01- / 04918-01B
04919-01- / 04919-01B

VENT® 50 WHITE / CRYSTAL

01668-01- / 01668-01D

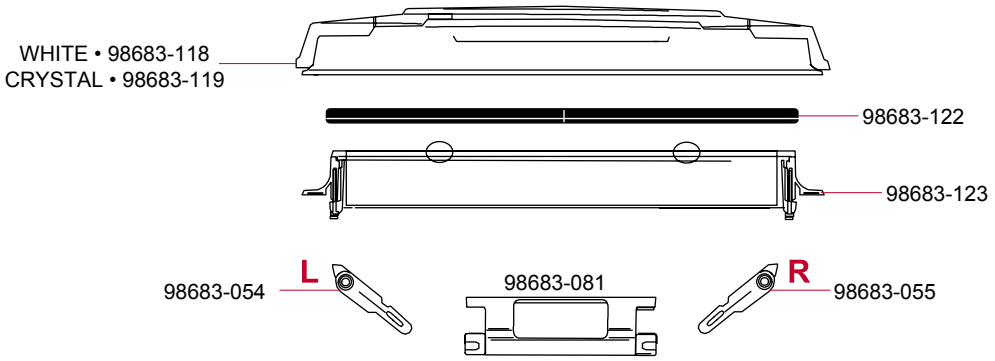

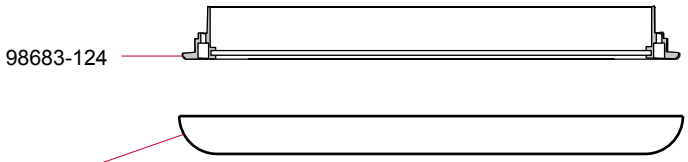

Rollo Vent 50
98683-045

LED

LED AWNING LIGHT
98655-639

LED GARAGE LIGHT
98655-640

LED SENSOR DOOR LIGHT
98655-641

LED AWNING LIGHT GUTTER
98655-642

RAFTER LED
98655-643

RAFTER LED CARAVANSTORE
98655-644

AQUA® 8 12V 7L / 12V 10L / 24V 7L
AQUA® 8 iSensor®

01216C01- / 01216B01A / 01216C01A
01216C03-

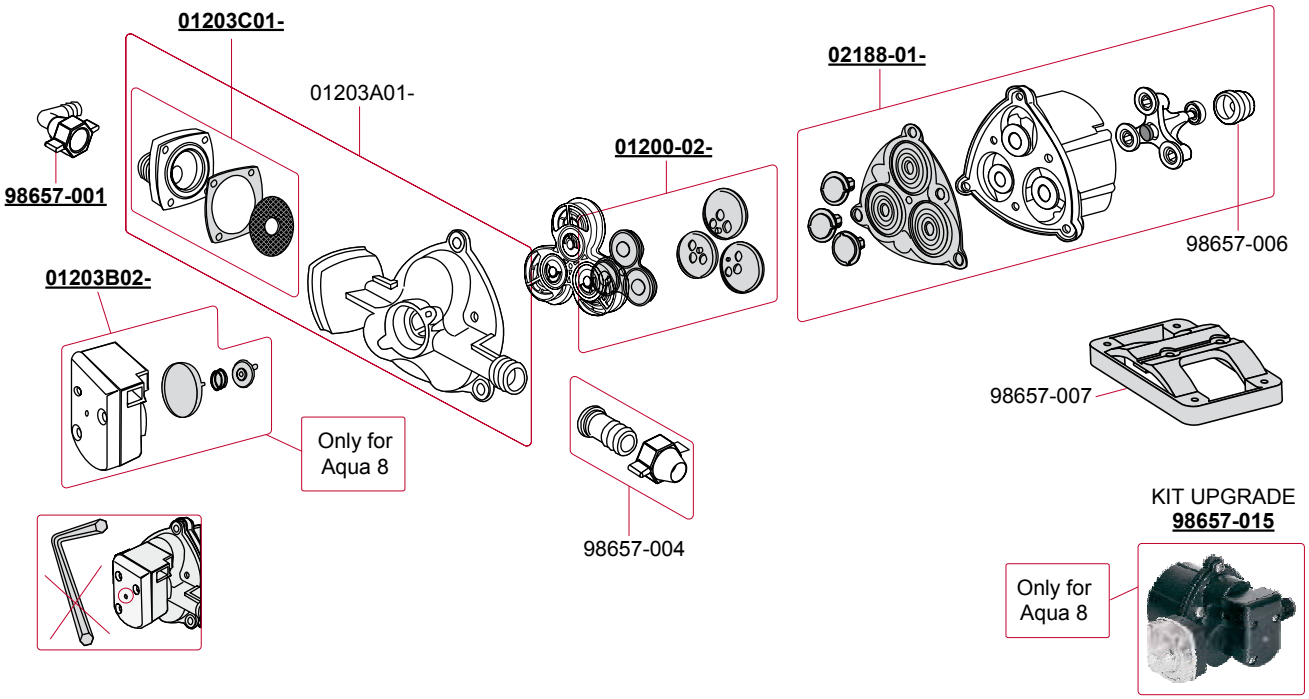

A20

02478-01-

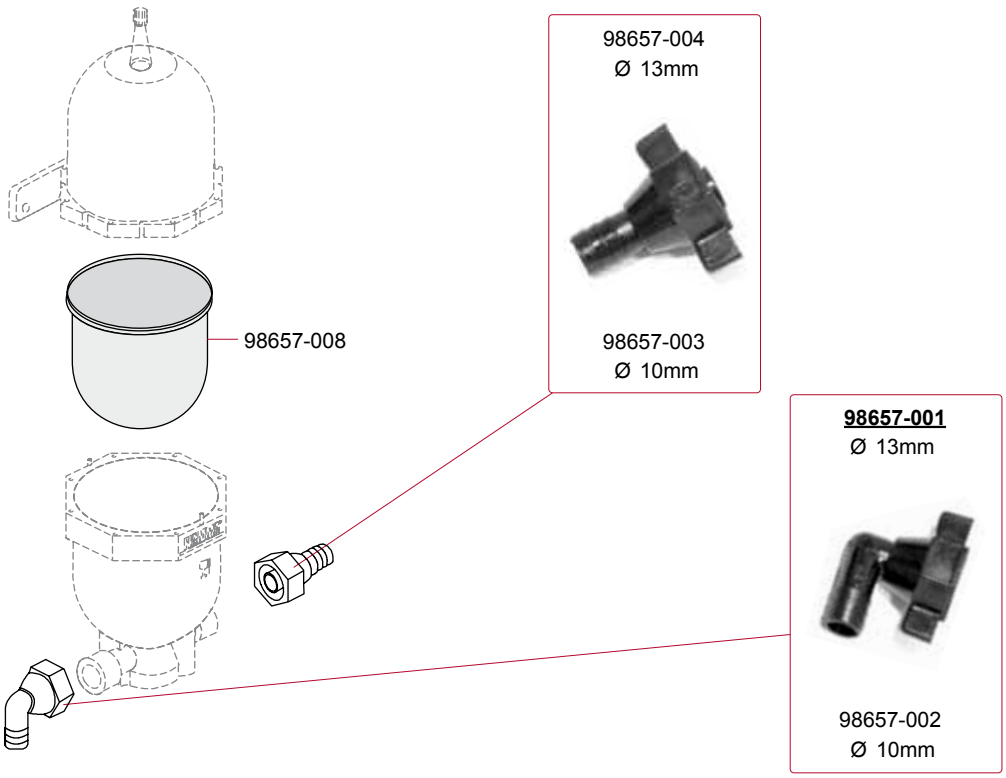

ROLL-TANK 23 W 02428A01-

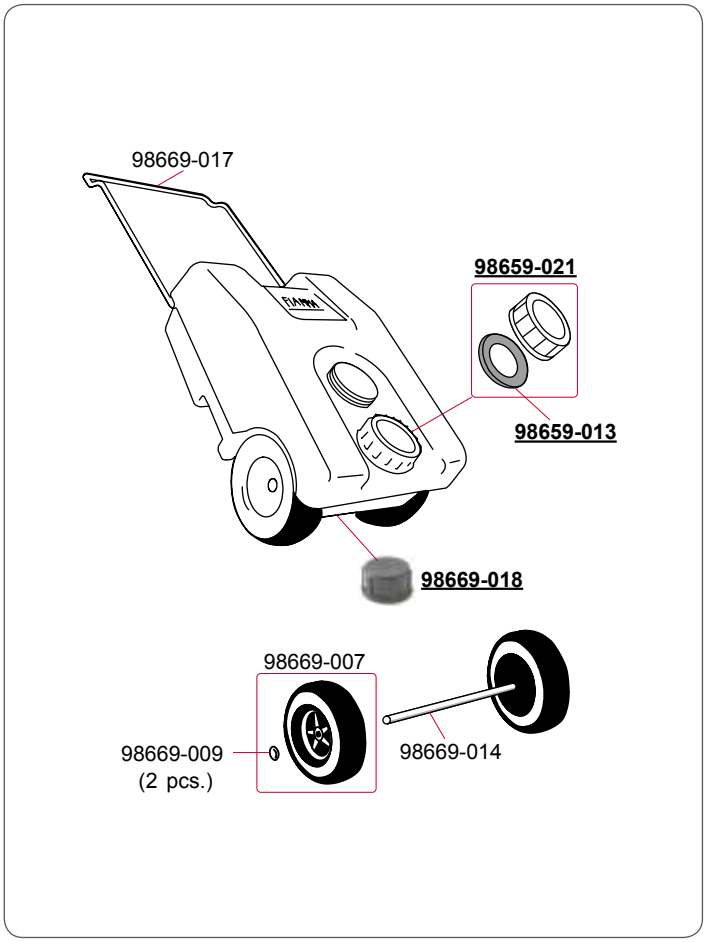

ROLL-TANK 40 W 02428-01-

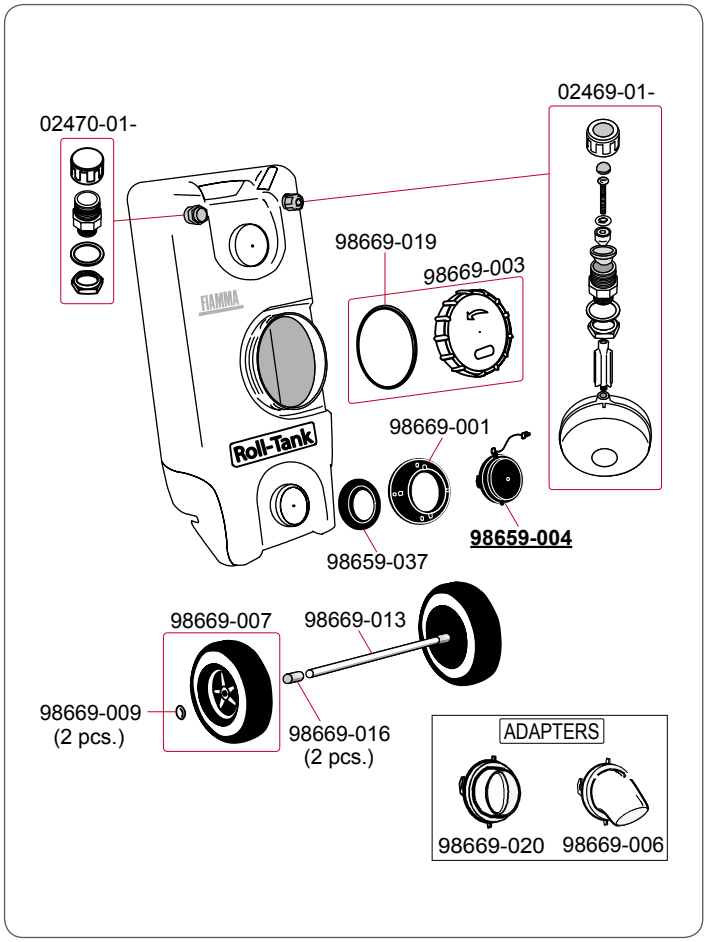

TANK 21 W 01684-01A

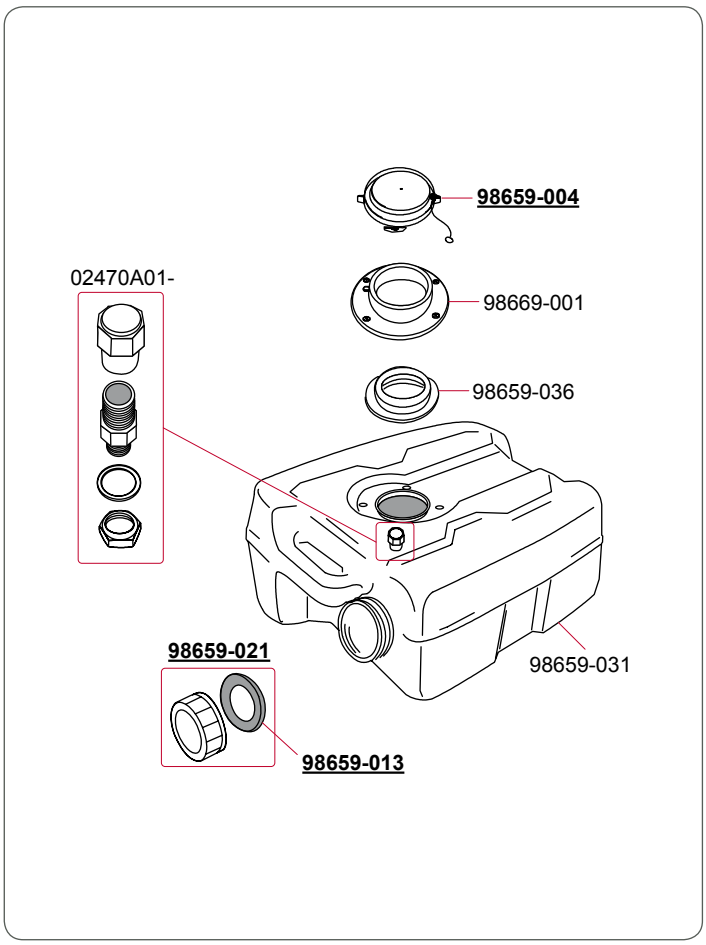

TANK 18 W 01684A01A

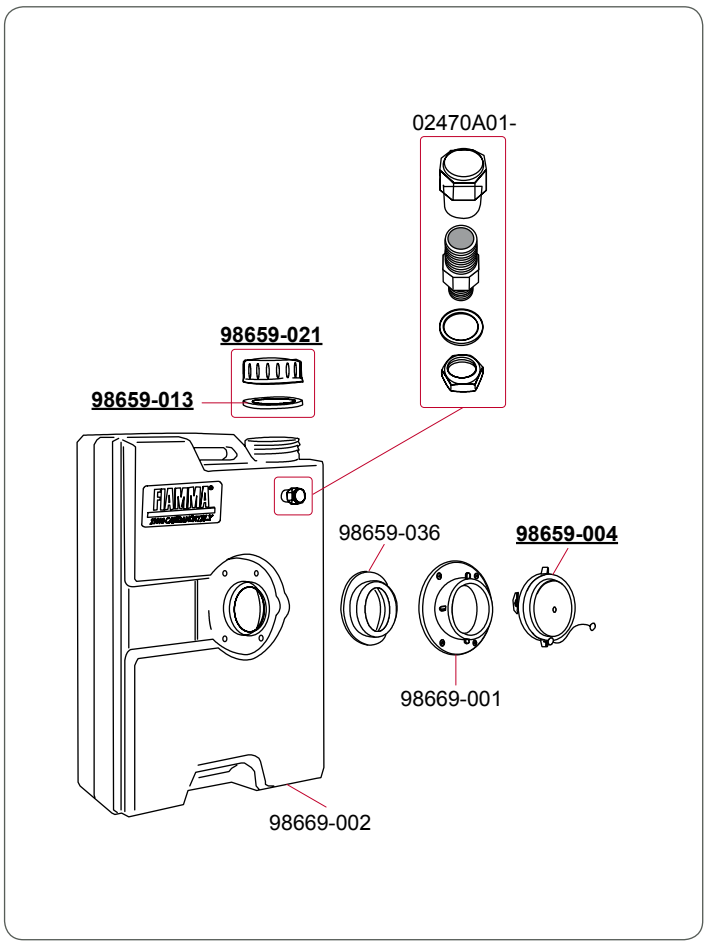

ROLL-TANK 23 F 02428A01A

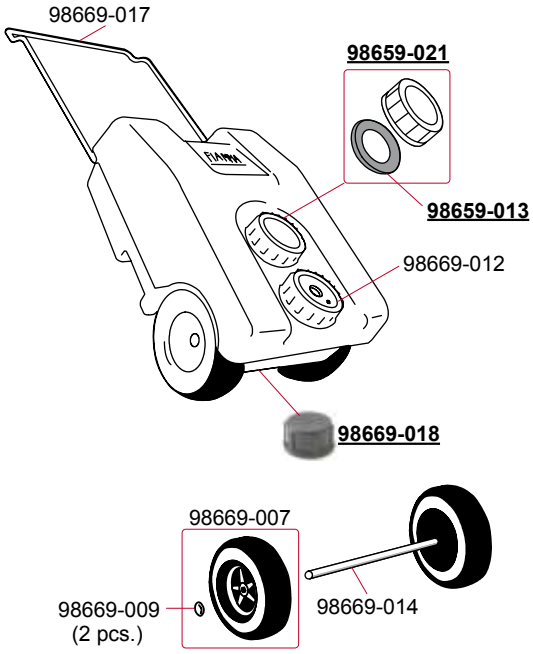

ROLL-TANK 40 F 02428-01A

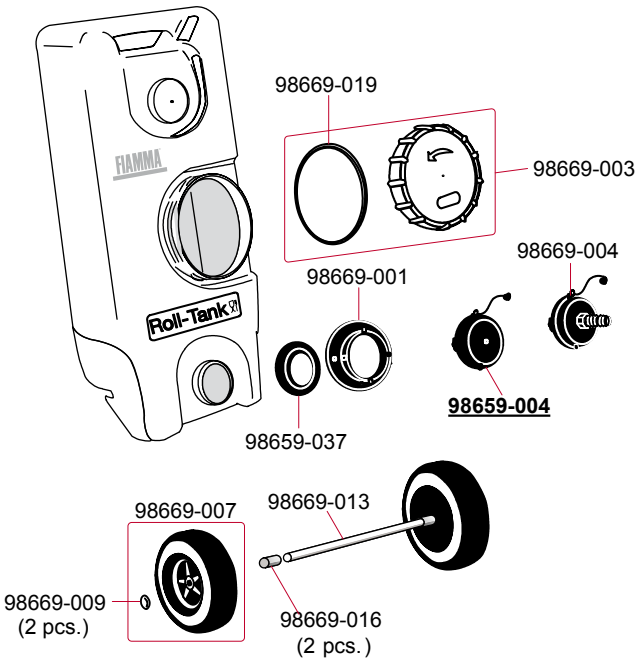

TANK 70 L 01537-01-

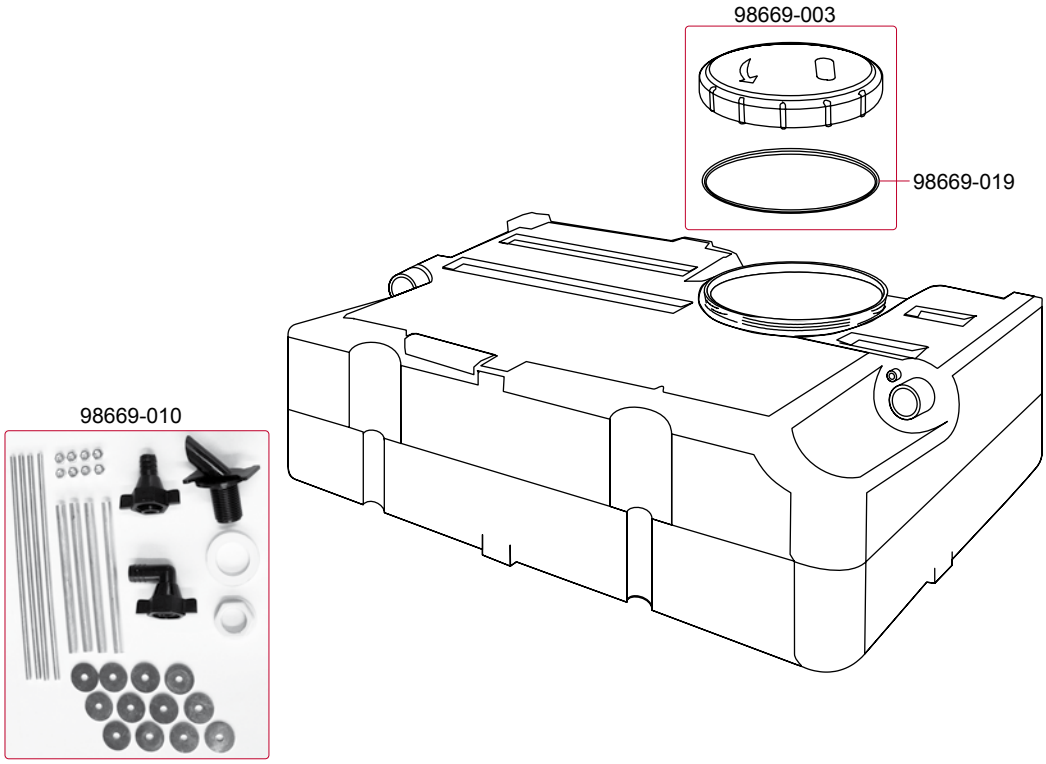

ULTRA-BOX® 1 / 2 / 3

02083-01- / 02084-01- / 02085-01-

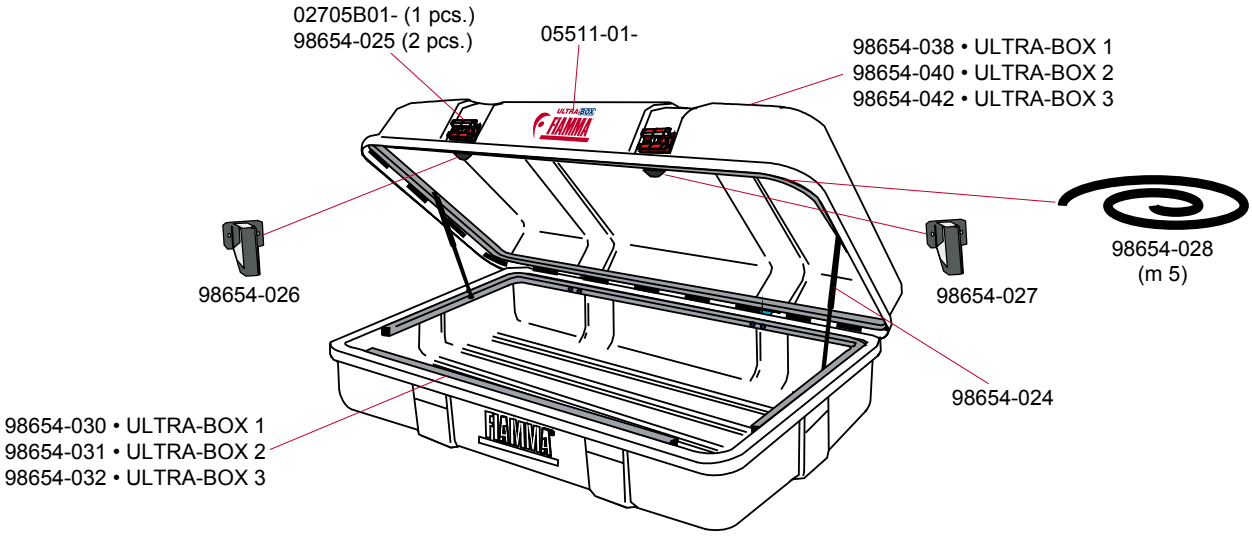

ULTRA-BOX® SPORT PRO

02086-01-

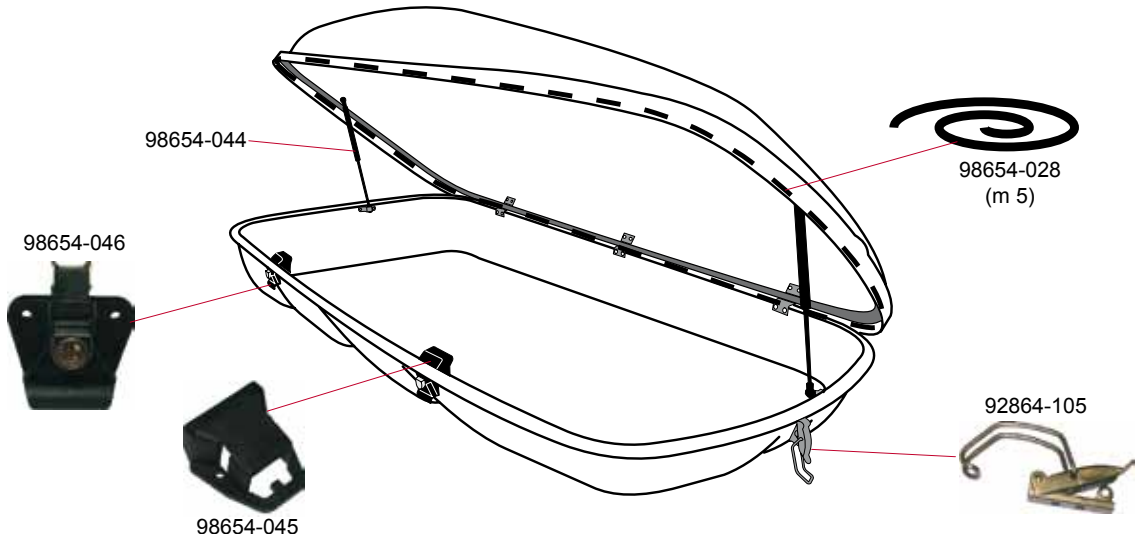

ULTRA-BOX® 180

02800-01-

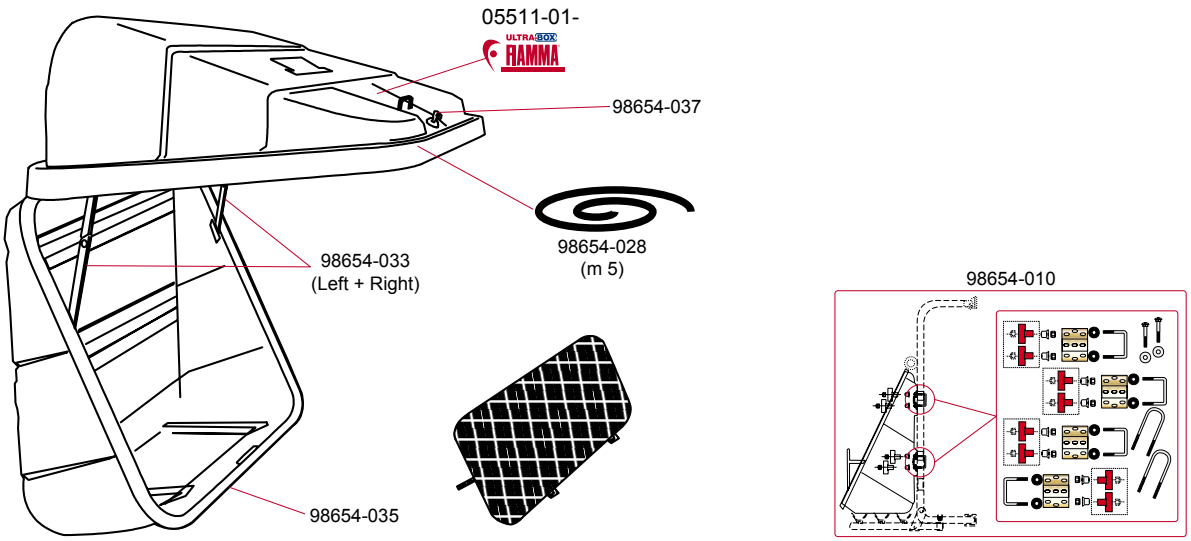

ULTRA-BOX® 320

04147-01-

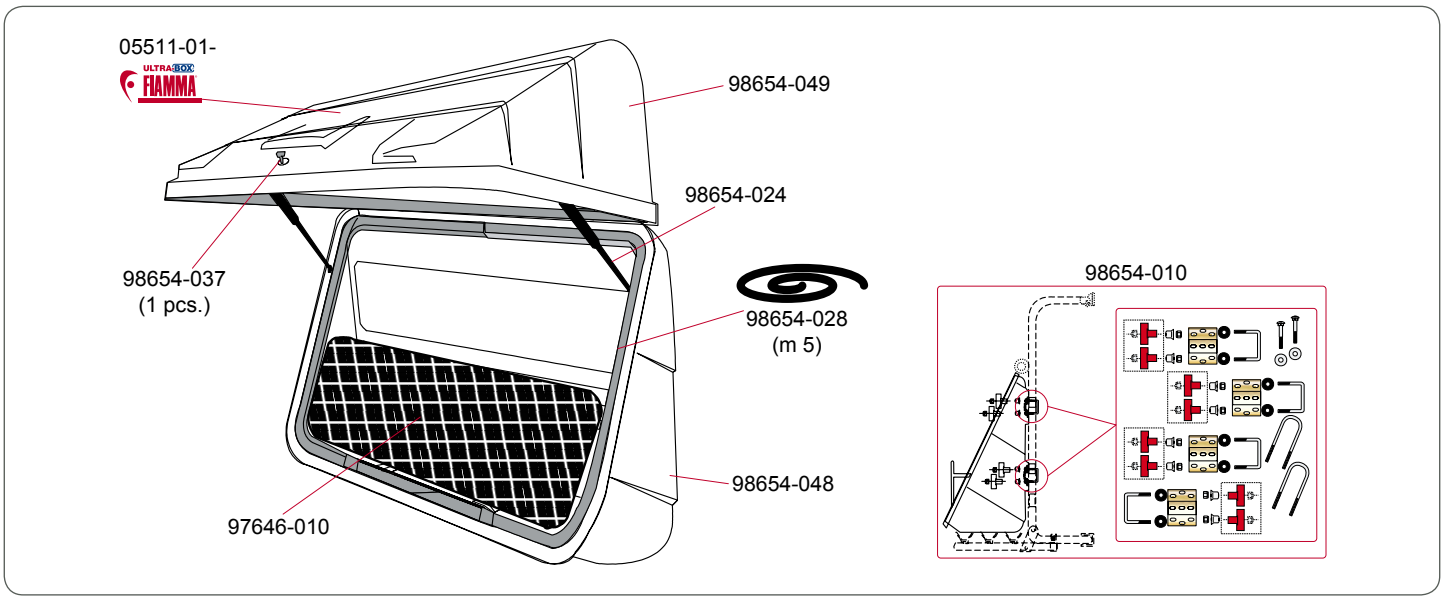

ULTRA-BOX® 360

02801-01-

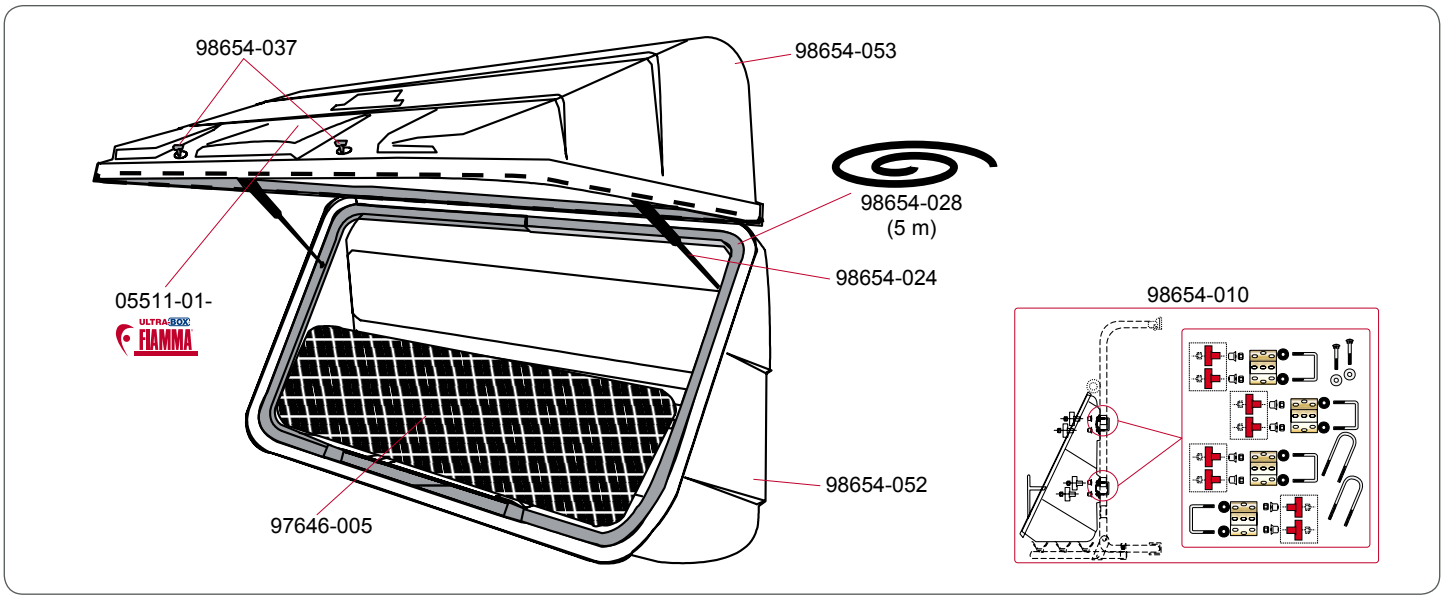

ULTRA-BOX® 500

04148-01-

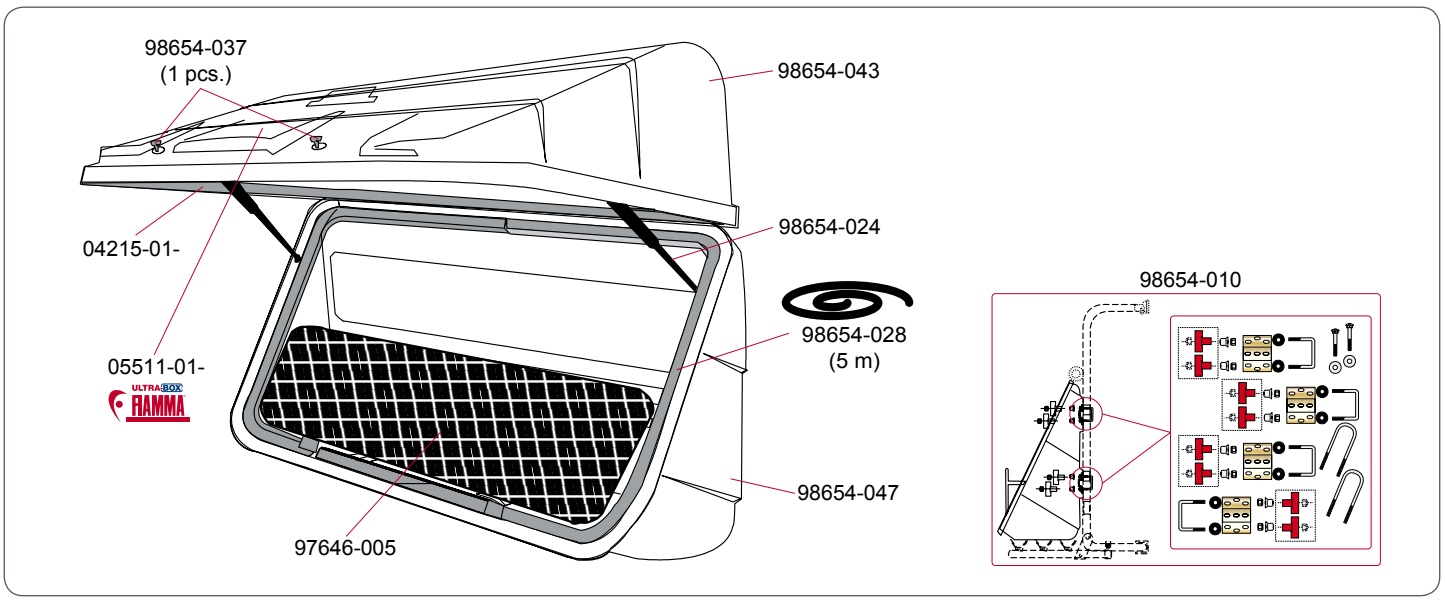

BI-POT® 34 / 39 / 30

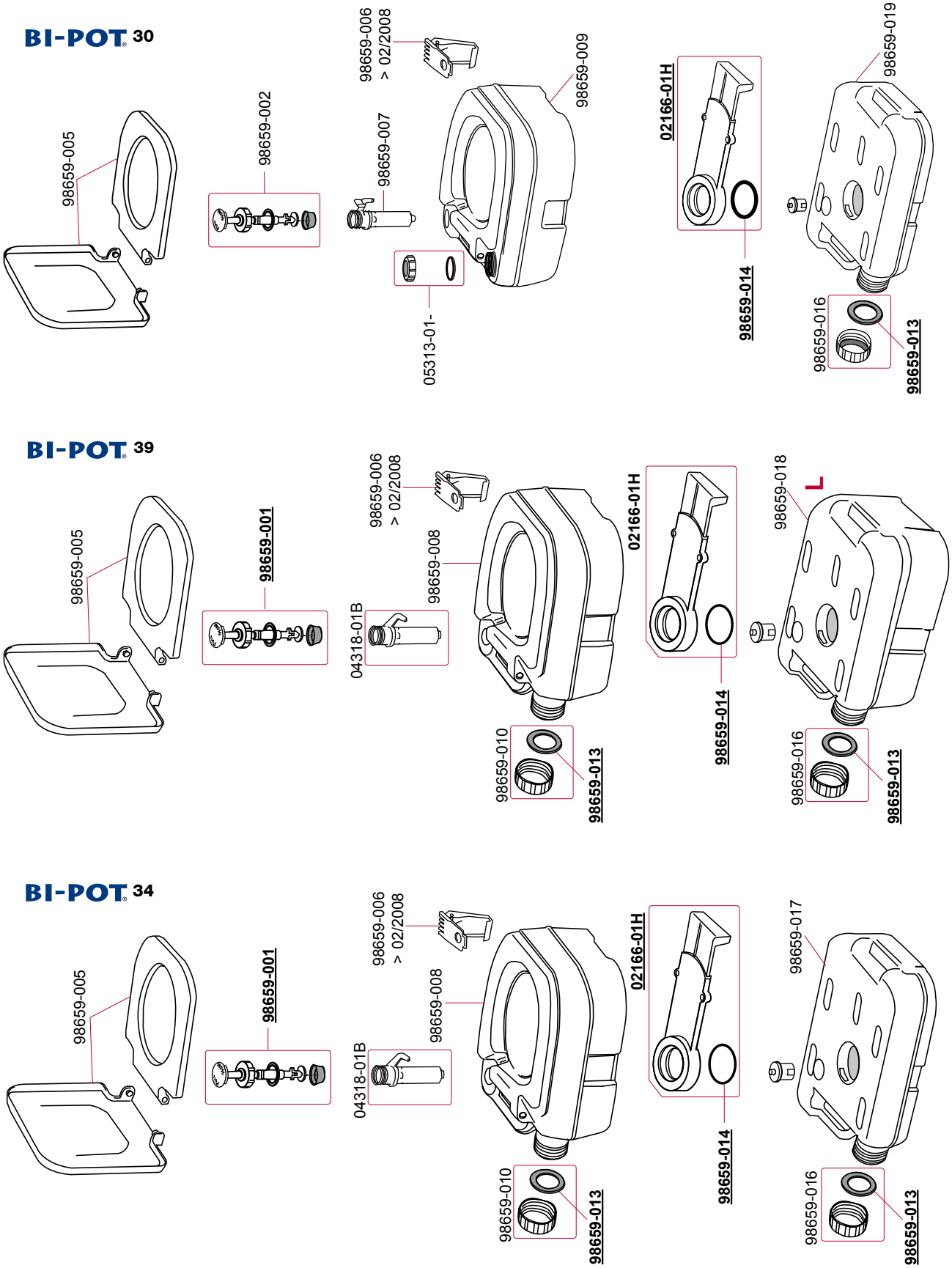

BI-POT® 1520 / 1513

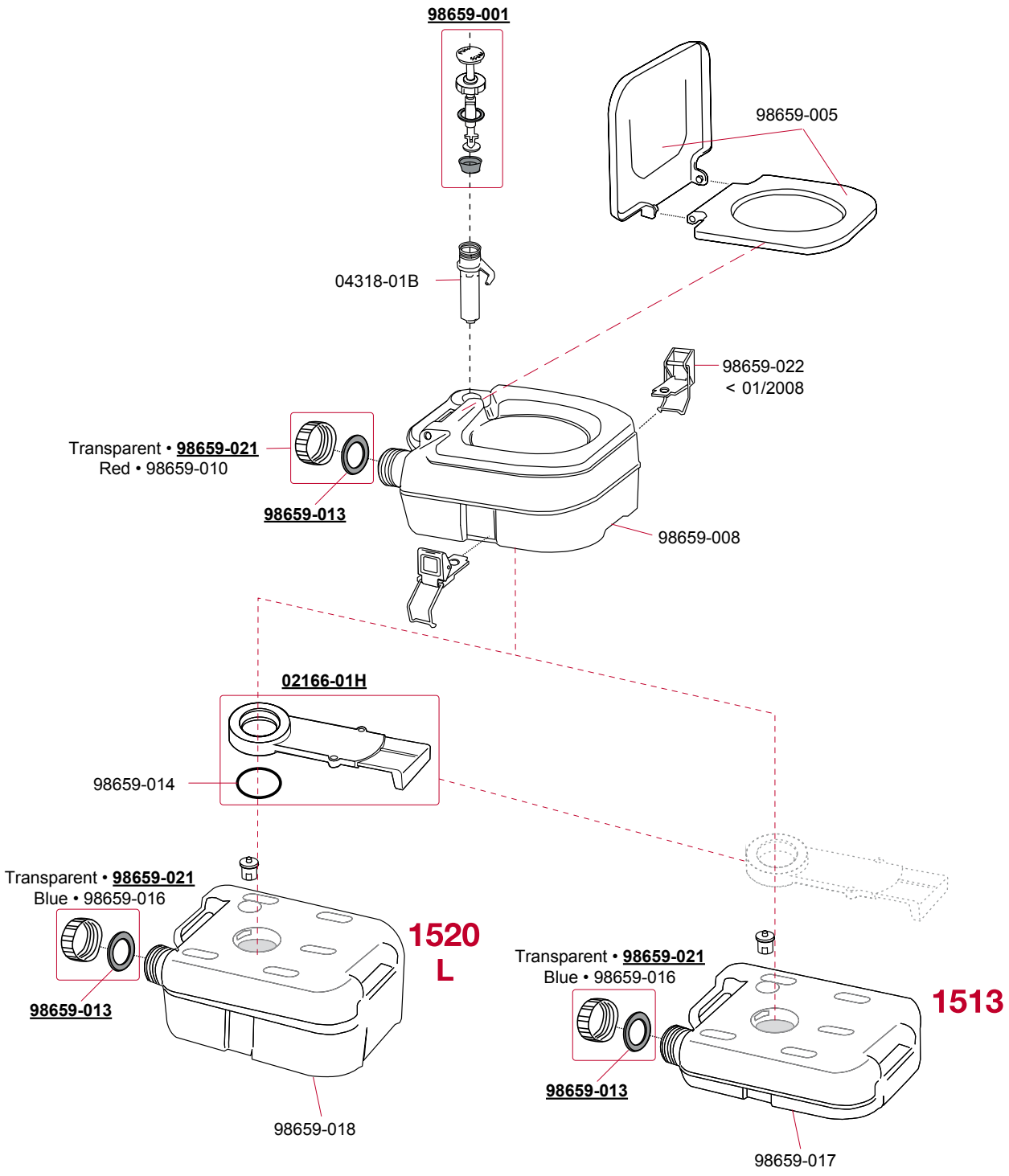

SAFE DOOR / SAFE DOOR FRAME
SAFE DOOR MAGNUM / KIT SECURITY LOCK

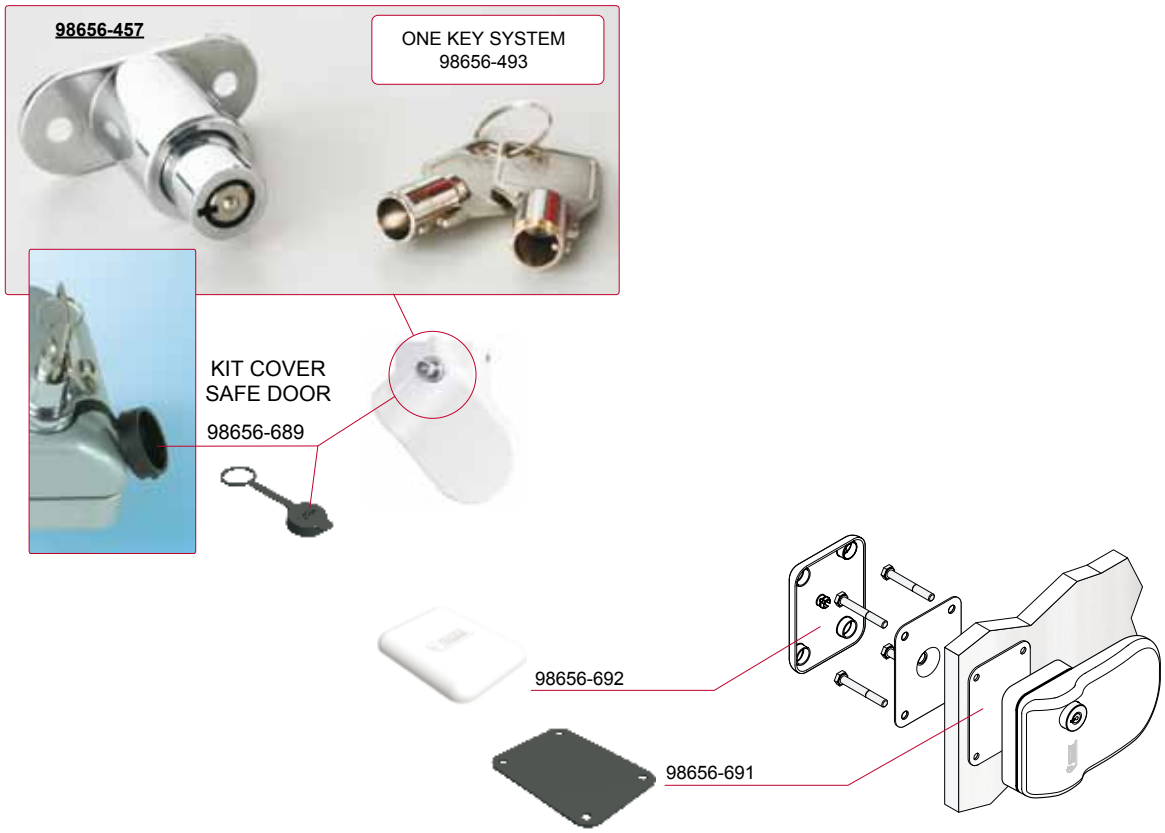

SECURITY 31 / 46

98656-345

SECURITY 46 PRO

DUO SAFE / DUO SAFE PRO

98658-070

FIXING-BAR® PRO L 98655-295

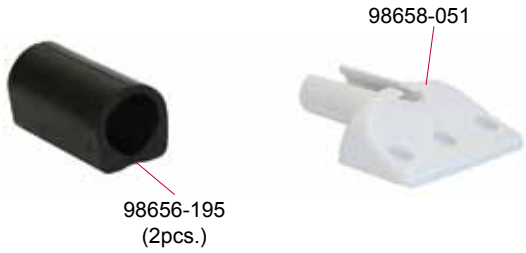

WATER CAP

WATER CAP (black)
98658-001

WATER CAP (white)
98658-002

CHOCK LEVEL

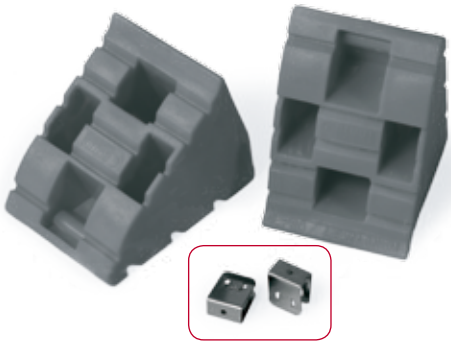

98684-001

DELUXE

98656-693

98656-695

98656-694

98658-037

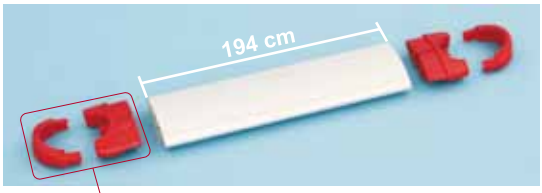

98658-045

98658-039

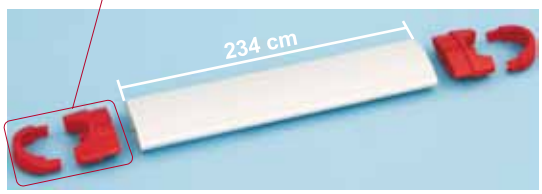

FIAMMA® SERVICE

fiamma.com

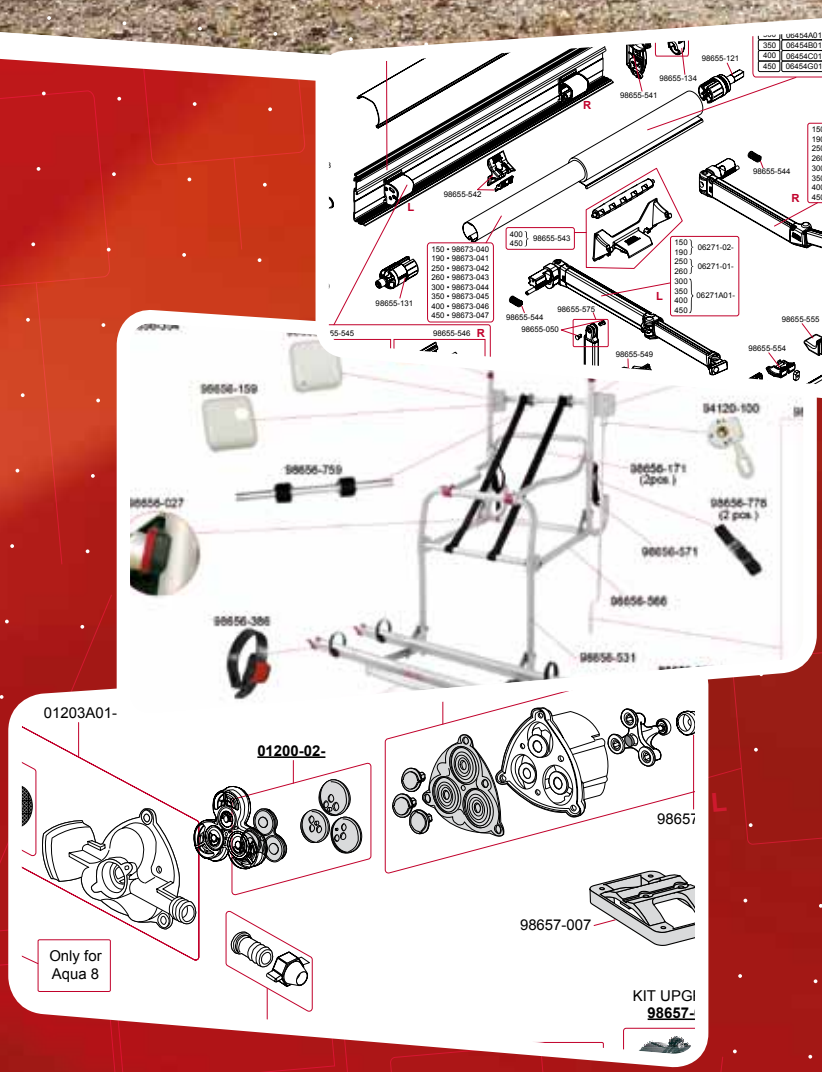

GENUINE FIAMMA® PARTS

ICIM
ISO 9001:2000
Cert. N° 0528/2

CERTIFIED FIAMMA ISO 9001 MANAGEMENT SYSTEM

Fiamma SpA - Italy
Via San Rocco, 56
21010 Cardano al Campo (VA)
Fax +39 0331 263 777